General Specifications

NTPF100
Exaopc
OPC Interface Package

GS 36J02A10-01E

■ GENERAL

As data sharing between information systems increases, the requirement to efficiently access and use plant information to meet business needs in a timely manner also increases. Within the process industry, the control room contains valuable information that has previously been inaccessible. Exaopc was created to provide an open OPC interface bridge between the control room and the outside world.
Exaopc is an OPC server running on a Microsoft Windows platform which can be connected to a variety of PCSs (Process Control Systems) providing OPC clients with process data and alarm events.
This GS contains the specification for the Exaopc OPC Server Interface Package.

■ FUNCTIONAL SPECIFICATIONS

Exaopc supports the following OPC specifications:

● Data Access (DA) Server Function

The DA Server reads and writes process data using item IDs as identifiers.

● Historical Data Access (HDA) Server Function

Exaopc automatically saves instantaneous values acquired from the DA Server and A&E Server, to an HDA historical database. The OPC client can access historical data by first connecting to the HDA Server.

● Alarms & Events (A&E) Server Function (*1)

The A&E Server provides alarms and events from plants that occur asynchronously. The following messages are available from Yokogawa CENTUM Integrated Production Control Systems:

- System alarm messages
- Process alarm messages
- Mode/status change messages
- Sequence messages
- Operation guide messages
- Engineering maintenance messages
- Operation record messages
- Server internal errors

*1: A&E server supports the following Alarm Management functions of CENTUM VP.
- Exaopc R3.72 or later supports for “Consolidated Alarm Management Software (CAMS) for HIS”
- Exaopc R3.78.10 or later supports for “Unified Alarms and Conditions Server (UACS)”

● Batch Server Function (*1) [VP Batch, CS Batch 3000]

The Exaopc batch server function (Exaopc/Batch) reads and writes batch data and its related information with VP Batch and CS Batch 3000.

*1: OPC client is dedicated to Exaquantum/Batch.

● OPC Security Interface

Exaopc provides security by using an OPC Security-compliant interface whenever an OPC Client uses the DA, A&E, HDA and/or Batch servers.

YOKOGAWA

Yokogawa Electric Corporation
2-9-32, Nakacho, Musashino-shi, Tokyo, 180-8750 Japan

GS 36J02A10-01E
©Copyright June 1999 (YK)
55th Edition Nov. 6, 2026 (YK)

■ GENERAL CONFIGURATION

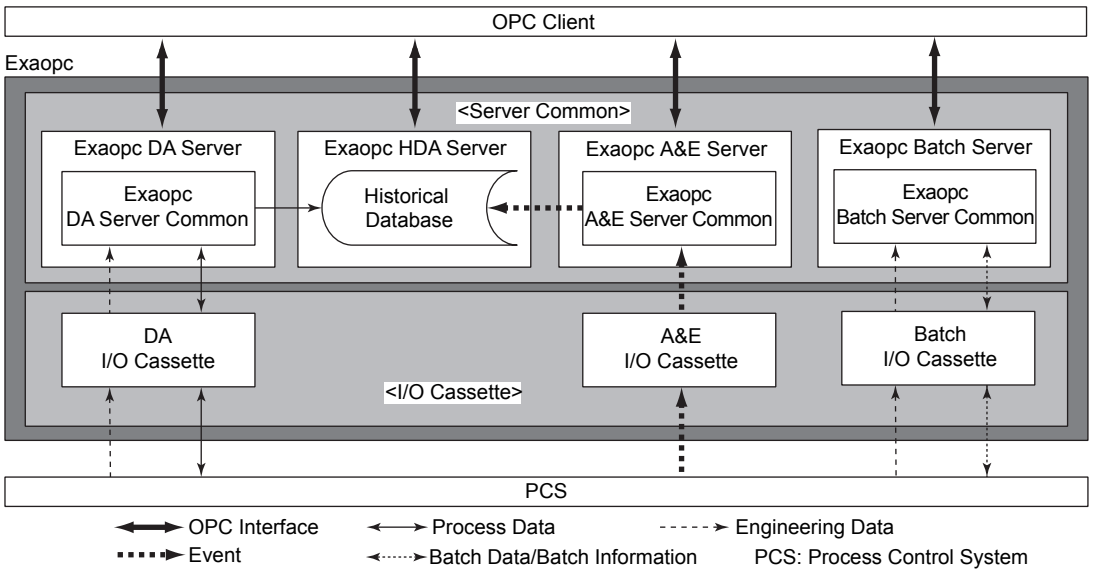

F01E.ai

■ FEATURES

● Major Applications

The Exaopc OPC Interface can be used in a wide variety of OPC client applications.

- Yokogawa packages, including Exaquantum PIMS and Exapilot (Operation Efficiency Improvement Package)
- OPC standard compliant general-purpose applications
- User applications

● Compliance with OPC Specifications

The Exaopc package supports OPC standard interface functions (DA/A&E/HDA, Batch, Security) specified by the OPC Foundation, and additional functions such as data item browsing.

● Connectivity with CENTUM Systems

Exaopc can be connected to Yokogawa CENTUM VP/CS 3000.

● Automatic Backup

The process data acquired by the DA server is automatically saved and stored in the historical database as backup data. Access to the stored data is enabled by the HDA server function.

● Equalization [CENTUM VP/CS 3000]

A list of tags in CENTUM can be equalized by Exaopc. When function blocks (tags) are added, deleted or changed in the FCS (Field Control Station) builder and they are loaded, a change notification is sent to Exaopc. Exaopc will then update function block data based on the received data.

● Browsing [CENTUM VP/CS 3000]

Users can view the content of the OPC server from OPC client. The OPC client can access CENTUM tag list Exaopc acquired by Equalization functions.

● CENTUM Security [CENTUM VP/CS 3000]

Exaopc security (account, scope of monitoring, operation ID, operator console group and access level) is dependent on the CENTUM.

● Traffic Control

When an OPC client attempts to access a large volume of data from a CENTUM system loading problems may occur (load concentration on control stations and control buses, in particular). To prevent problems, access from OPC clients are restricted to avoid the maximum accessible data rate being exceeded.

● Expanded Test Functions [CENTUM VP/CS 3000]

By connecting to the Expanded Test Functions on CENTUM VP/CS 3000 users can access the FCS simulator on a station with CENTUM VP/CS 3000 engineering functions. Therefore, users can perform engineering and testing OPC clients without using actual FCSs.

All Rights Reserved. Copyright © 1999, Yokogawa Electric Corporation

● Multiple Project Connection [CENTUM VP/CS 3000]

On Exaopc, users can use Multiple Project Connection functions for CENTU VP/CS 3000, which enables integrated monitoring of multiple projects. This allows users the ability to handle CENTUM VP/CS 3000/CS project data on Exaopc as well as the data from their own project.

To use these functions, the supervisory CENTUM VP/CS 3000 system requires a Multiple Project Connection Package.

Function specifications, restrictions, and the operational environment for these functions are the same as for CENTUM VP/CS 3000.

● Viewer Function and Tool Function

These functions provide various kinds of viewer and tool to check and monitor Exaopc operation status.

Software Configuration Viewer, Station Viewer, OPC Connection Confirm, Exaopc Server Monitor

● IT Security support

A user can select suitable security level out from standard and legacy types. This IT security level is common through Yokogawa system products, and Exaopc is able to have the same IT security as CENTUM system.

Domain integration is supported R3.82 or later, and with IT security version 2.0 or later.

If the Exaopc R3.82.02 patch is applied to Exaopc R3.82.00 to enable operation on Windows Server 2025, IT Security Version 3 cannot be applied.

● Exaopc Product Security Function

In order to tighten the security for accessing the CENTUM system, access to the CENTUM data is blocked until after the user authentication is done by logging on to the OPC client.

● Solutions for Redundant Exaopc

Exaopc provides two solutions with additional function that enhance its availability in case of its failure. Please contact Yokogawa for additional information.

- Two Exaopc stations are configured and Exaopc-RD switches OPC connection in client PC automatically, please refer to “Duplicated OPC Server Configuration”.
- Exaopc can run on the two computers that make up the redundancy configuration, please refer to “Dual-redundant Platform for Computer (Exaopc R3.77 or later)”.

■ CONNECTED SYSTEMS

System	Connection Method
CENTUM VP R6.01 or later (Including Entry Class)	Vnet/IP

■ SYSTEM CONFIGURATION

● Server/Client Composition

The following two client/server configurations can be used:

- The OPC client exists on a PC with Exaopc installed.
- The OPC client exists on a supervisory computer (Windows PC).

Only one Exaopc can be installed in one PC. Two or more Exaopc can not be installed in one PC.

● Multiple Clients

A single Exaopc can be accessed from multiple OPC clients.

● Multiple Servers

Users can access multiple Exaopc’s from a single OPC client.

All Rights Reserved. Copyright © 1999, Yokogawa Electric Corporation

● Duplicated OPC Server Configuration

Exaopc-RD (installed on the OPC client machine) supports OPC Server redundancy by monitoring two Exaopc servers and automatically switching from the Master to the Standby Exaopc server if the Master becomes unavailable. Please contact Yokogawa for additional information.

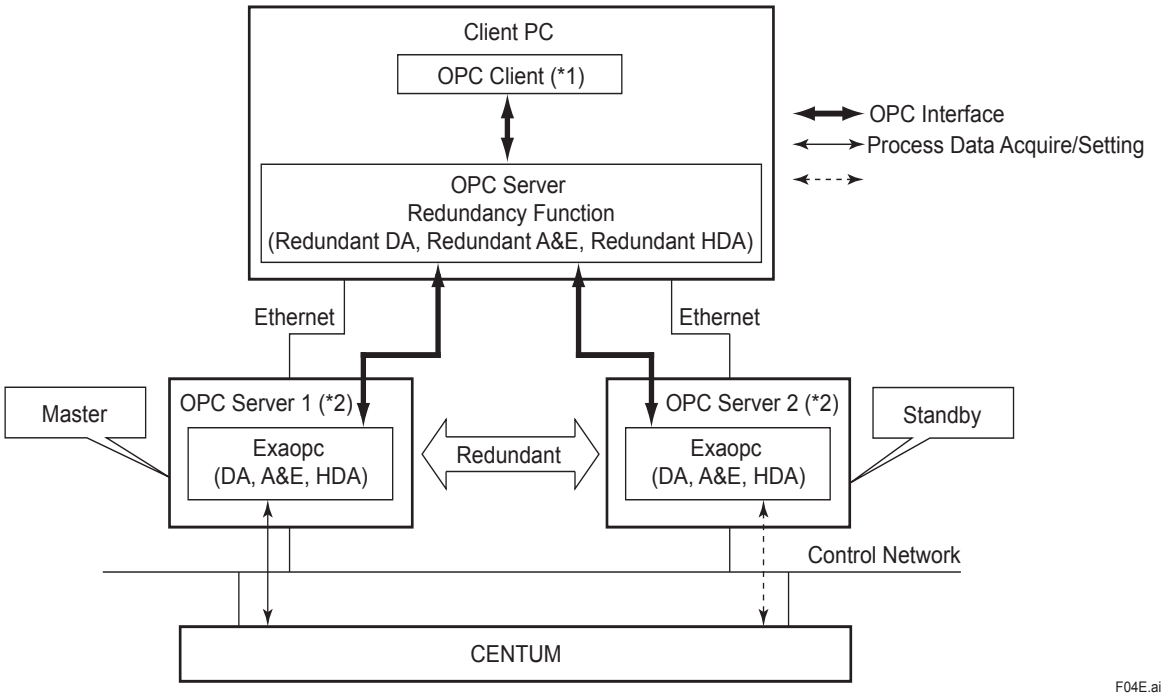

*1: Exaopc-RD supports Exaquantum and Exapilot only for an OPC client.
*2: Exaopc-RD supports Exaopc (NTPF100-S1, NTPF100-S3) only for an OPC server.

Figure: Configuration Example for Duplicated OPC Server

All Rights Reserved. Copyright © 1999, Yokogawa Electric Corporation

● CENTUM VP/CS 3000 System Configuration

- Exaopc is directly connected to the DCS control buses using the VI702 Control Bus Interface Card to communicate with control stations. This provides Exaopc with the ability to read and write tag data and receive process messages.
- Exaopc automatically equalizes engineering data from the CENTUM ENG/EWS Engineering Station.
- Multiple Exaopc servers can be connected to one CENTUM system. Those servers are counted as control bus stations equivalent to Human interface station (HIS) on the system.
- Please configure the entire system considering the CPU loading of the control stations and the bus loads of the control buses.
- Exaopc for VP Batch and CS Batch 3000 can be connected to VP Batch and CS Batch 3000 packages.
- Connection to CENTUM VP Entry Class and CS 3000 Entry Class is similar to that of CENTUM VP/CS 3000.
-

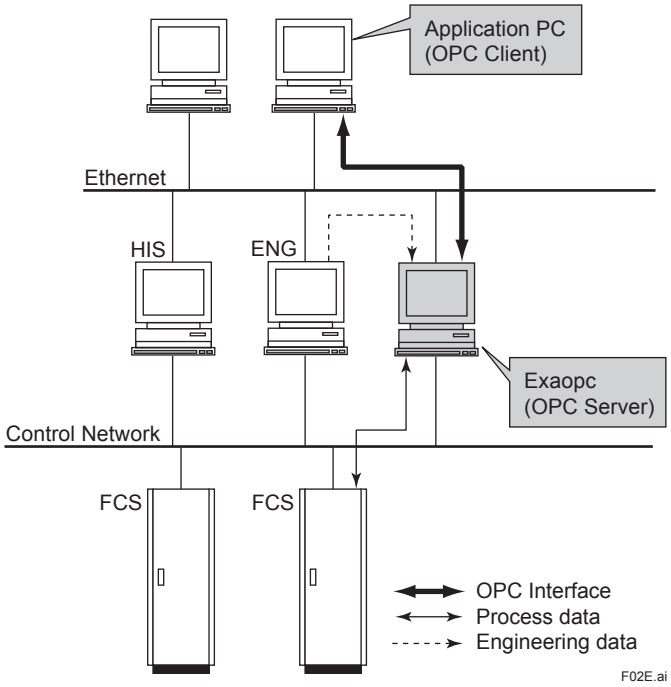

Figure: Configuration Example for CENTUM VP/CS 3000

All Rights Reserved. Copyright © 1999, Yokogawa Electric Corporation

■ APPLICATION CAPACITY

OPC Server function	Item	Application capacity
DA Server	A number of clients (A number of server objects)	100 clients
	A number of groups (A number of group objects)	1000 groups
	A number of Item IDs	10000 item IDs/group 100000 item IDs/all groups
	Cache update period (Data gathering period)	1 to 3600 sec
	Max. throughput of data access (*1)	4000 item IDs/sec
A&E Server (*2)	A number of clients (A number of server objects)	100 clients
	Max. number of event-registered objects (Max. number of event subscription objects)	1000 objects
HDA Server (*3)	A number of clients (A number of server objects)	100 clients
	A number of browser (A number of browser objects)	100 browser/server object 10000 browser/all server objects
	A number of item IDs	100000 item IDs/server object
	Max. historical data save period (*4)	Not restricted (Depends on disk capacity, its area is defined with a Record parameter)
Batch Server	A number of clients (A number of server objects)	100 clients
	A number of groups (A number of group objects)	1000 groups
	A number of item IDs	10000 item IDs/group 100000 item IDs/all groups

*1: The throughput value of data access can be set to 2000 or 4000 item IDs/sec. either manually or automatically.
(It is 2000 item IDs/sec. fixed when Exaopc R3.60 or before.)
With automatic selection by Exaopc, the throughput will be set to 4000 item IDs/sec. if the following condition is met, and set to 2000 item IDs/sec. otherwise.
- Stations in CENTUM VP that Exaopc is connected are FCS(the followings) and UGS
  FFCS-V (models AFV30☐ and AFV40☐) when Exaopc R3.70 or later
  FFCS-C (model A2FV50☐) when Exaopc R3.73 or later
  FFCS-R (model A2FV70☐) when Exaopc R3.75 or later

When a CENTUM system consists of multiple projects, the above condition must be met in all projects.
If set to 4000 item IDs/sec., system design with consideration of the data access volume for each station is required to avoid the affection for the data access behaviors of other Exaopc Server and HIS.

*2: On Exaopc, process alarms are treated as condition events. A table is provided to manage process alarm occurrence, ACK and recovery events. In case of overflow on the table due to numerous process alarms, the OPC client will receive the process alarm occurrence events only. DCS will receive a system alarm to notify the overflow situation on the table.

*3: If the data requests for a HDA are more than 20000 ItemIDs (2880 default recodes per each ItemIDs), the response may take a long time. It may be necessary to use one or more Exaopc. (Example: the phenomenon may occur when using the catch up function of Exaquantum.)

*4: The PC performance may be influenced when the number of records increases from the default value.

All Rights Reserved. Copyright © 1999, Yokogawa Electric Corporation

■ OPERATING ENVIRONMENT

● Hardware

Hardware requirements for Exaopc are described in this section. DVD-ROM Drive is necessary.

When not applying CAMS for HIS Support function (NTPF100-S1 or NTPF100-SB)

Specification Item	OS	
	Windows 10, Windows 11	Windows Server 2016, Windows Server 2019, Windows Server 2022, Windows Server 2025
CPU	Xeon Dual Core 2.0 GHz or faster	Xeon Dual Core 2.93 GHz or faster
Main memory	4 GB or more	
Disk capacity	40 GB or more	

When applying CAMS for HIS Support function (NTPF100-S6)

Specification Item	OS	
	Windows 10, Windows 11	Windows Server 2016, Windows Server 2019, Windows Server 2022, Windows Server 2025
CPU	Xeon Quad Core 2.80 GHz or faster	
Main memory	4 GB or more	
Disk capacity	80 GB or more (Windows 10) / 110 GB or more (Windows 11)	90 GB or more

When applying UACS Support function (NTPF100-S6)

Specification Item	OS	
	Windows 10, Windows 11	Windows Server 2016, Windows Server 2019, Windows Server 2022, Windows Server 2025
CPU	Xeon Quad Core 2.80 GHz or faster	
Main memory	4 GB or more	
Disk capacity	40 GB or more (Windows 10) / 64 GB or more (Windows 11)	40 GB or more

UACS dedicated Ethernet is necessary in addition to Vnet/IP and Ethernet.
Please add network (adapter) and connect to UACS dedicated Ethernet.

When applying Exaopc OPC Server Redundancy (Exaopc-RD) (NTPF100-SX)

Specification Item	OS
	Windows Server 2016, Windows Server 2019, Windows Server 2022, Windows Server 2025
CPU	Xenon Dual Core 2.93 GHz or faster
Main memory	4 GB or more
Disk capacity	50 GB or more

All Rights Reserved. Copyright © 1999, Yokogawa Electric Corporation

● Software

The following lists the software requirements for Exaopc and the OPC Client connected to Exaopc according to the Exaopc release numbers.

Only the latest version of Exaopc is available for sale.
Exaopc package and its Windows operating system (OS) must share the same language environment.

Exaopc release number			Windows			Exaopc (OPC server)	Exaopc-RD	OPC client (*1)
R3.74 R3.75	R3.73	R3.70 R3.71 R3.72	Windows 7 Professional (64-bit)		SP1	X	N/A	X (*2)
			Windows Vista Business (32-bit)		SP2	X	N/A	X
			Windows Server 2008 Standard (32-bit)		SP2	X	X	X
			Windows Server 2008 R2 Standard (64-bit)		SP1	X	X	X
			Windows 8.1 Professional (32-bit/ 64-bit) (*4)			N/A	N/A	X
			Windows Server 2012 Standard (64-bit) (*4)			N/A	X	X
			Windows Server 2012 R2 Standard (64-bit) (*4)			N/A	X	X
R3.77 R3.78	R3.76		Client OS	Windows 7 Professional (64-bit) (*3)	SP1	X	N/A	X (*2)
				Windows 8.1 Professional (32-bit/ 64-bit) (*4)		N/A	N/A	X
				Windows 10 Enterprise 2016 LTSB (64-bit) (including IoT) (*4)		X	N/A	X
				Windows 10 Pro (32-bit/64-bit) (*4)		N/A	N/A	X
			Server OS	Windows Server 2008 R2 Standard (64-bit) (*3)	SP1	X	X	X
				Windows Server 2012 Standard (64-bit) (*4)		N/A	X	X
				Windows Server 2012 R2 Standard (64-bit) (*4)		N/A	X	X
				Windows Server 2016 Standard (64-bit) (*4)		X	X	X
R3.80 (*4)	R3.79 (*4)		Client OS	Windows 8.1 Professional (32-bit / 64-bit)		N/A	N/A	X
				Windows 10 Enterprise 2016 LTSB (64-bit) (including IoT)		X	N/A	X
				Windows 10 Pro (32-bit/ 64-bit)		N/A	N/A	X
				Windows 10 Enterprise LTSC 2019 (64-bit) (including IoT)		X	N/A	X
			Server OS	Windows Server 2012 Standard (64-bit)		N/A	X	X
				Windows Server 2012 R2 Standard (64-bit)		N/A	X	X
				Windows Server 2016 Standard (64-bit)		X	X	X
				Windows Server 2019 Standard (64-bit)		X	X	X
R3.81 (*4)			Client OS	Windows 10 Enterprise 2016 LTSB (64-bit) (including IoT)		X	N/A	X
				Windows 10 Pro (32-bit / 64-bit)		N/A	N/A	X
				Windows 10 Enterprise LTSC 2019 (64-bit) (including IoT)		X	N/A	X
				Windows 10 Enterprise LTSC 2021 (64-bit) (including IoT)		X	N/A	X
			Server OS	Windows Server 2016 Standard (64-bit)		X	X	X
				Windows Server 2019 Standard (64-bit)		X	X	X
				Windows Server 2022 Standard (64-bit)		X	X	X
R3.82 (Latest) (*4)			Client OS	Windows 10 Enterprise 2016 LTSB (I64-bit) (Including IoT)		X	N/A	X
				Windows 10 Pro (32-bit / 64-bit)		N/A	N/A	X
				Windows 10 Enterprise LTSC 2019 (64-bit) (Including IoT)		X	N/A	X
				Windows 10 Enterprise LTSC 2021 (64-bit) Including IoT)		X	N/A	X
				Windows 11 Pro (64-bit)		N/A	N/A	X
				Windows 11 Enterprise (64-bit)		N/A	N/A	X
				Windows 11 Enterprise LTSC 2024 (64-bit) (Including IoT)		X	N/A	X
			Server OS	Windows Server 2016 Standard (64-bit)		X	X	X
				Windows Server 2019 Standard (64-bit)		X	X	X
				Windows Server 2022 Standard (64-bit)		X	X	X
				Windows Server 2025 Standard (64-bit) (*5)		X	X	X (*6)

All Rights Reserved. Copyright © 1999, Yokogawa Electric Corporation

LTSB: Long-Term Servicing Branch LTSC: Long-Term Servicing Channel
X: Supported N/A: Not supported
Note: Exaopc runs on 64-bit Windows with WOW64 (It makes 32-bit applications capable of running on 64-bit Windows.)
*1: This line clarifies Software environment of “Exaopc client setup” that Exaopc provides tool for some settings on client PC to connect with Exaopc. Files this tool provides are for 32-bit applications.
*2: 32-bit OS is supported only for OPC client connected to Exaopc R3.71 or later.
*3: Windows 7 and Windows Server 2008 R2 are not supported in Exaopc R3.78.10 or later.
*4: OPC communication may become impossible between operating systems that have “CVE-2021-26414” applied and those that have not. If you are using an OPC client on an older operating system that cannot apply “CVE-2021-26414,” do not use an operating system that has “CVE-2021-26414” applied, such as Windows 11, for Exaopc.
*5: Apply Exaopc R3.82.02 patch software.
*6: Please contact Yokogawa for additional information.

● Virtualization platform (R3.77 or later)

Exaopc can run on virtualization platform (HY-V) R1.03 or later or virtualization platform (VM-W) R1.01 or later.

The following suffix codes are for CENTUM VP connection and are available in virtualization platform.

NTPF100-S1 (for CENTUM VP only) Not available for CENTUM CS 3000
NTPF100-S6 (for CENTUM VP supporting “CAMS for HIS”/UACS)
NTPF100-SB (for VP Batch only) Not available for CS 3000 Batch

NTPF100 and “Vnet/IP Interface package” (HY-V) (NTPF330) or NTPF100 and “Vnet/IP Interface package (VM-W)” (NT3PF350) is necessary. (“Vnet/IP interface card” (VI702) is not necessary.)

Please refer to “MODEL AND SUFFIX CODE” on back page, also refer to “OpreX IA System Virtualization Platform HY-V” (GS 30A05B10-01EN) or “OpreX IA System Virtualization Platform VM-W” (GS 30A05B50-01EN) about details.

● Dual-redundant Platform for Computer (Exaopc R3.77 or later)

Exaopc can run on “Dual-redundant Platform for Computer” R2.01 or later.
The following suffix codes are for CENTUM VP connection and are available on “Dual-redundant Platform for Computer”.

NTPF100-S1 (for CENTUM VP (*1) only) Not available for CENTUM CS 3000
NTPF100-S6 (for CENTUM VP supporting “CAMS for HIS”/UACS (*1))
NTPF100-SB (for VP Batch only) (*2) Not available for CS Batch 3000
*1: CENTUM VP R5 or later
*2: CENTUM VP Batch R5 or later

The following points should be noted when using Exaopc OPC UA on the PC Redundancy Platform.

- Vnet/IP communication (NTPF330, NT3PF350 or VI702) is not necessary in the Dual-redundant platform.
- A separate computer is required for OPC client to connect with Exaopc. Only Exapilot server can be installed on the same computer with Exaopc.
- This Dual-redundant Platform plans to support Exaquantum, Exapilot and so on as an OPC client for Exaopc.
- The PC redundancy platform consumes hardware resources as needed for synchronization processes. Therefore, before beginning operation, please connect the Exaopc OPC UA to an OPC client and verify the execution performance of the server functions.

Please refer to the GS “IA System Products Dual-redundant Platform for Computer”(GS 30A05C10-01EN) for details.

Please contact Yokogawa for additional information.

All Rights Reserved. Copyright © 1999, Yokogawa Electric Corporation

● Combinations between CENTUM versions / revisions and Exaopc revisions

You can use Exaopc and CENTUM with the following combinations.
Some combinations are prohibited, or some of the features are not available with certain combinations.

Combinations of Exaopc and CENTUM CS 3000/CENTUM VP (up to R6.12) (for NTPF100-S1, NTPF100-SB)

Exaopc	CS 3000	CENTUM VP															
	R3.01 to R3.09	R4.01 to R4.03	R5.01	R5.02	R5.03	R5.04	R6.01	R6.02	R6.03	R6.04 R6.05	R6.06	R6.07	R6.07.10	R6.08	R6.09 R6.10	R6.11	R6.12
R3.70	XX	XX	XX	X (*1)	X (*1)	X (*1)	X (*1)	X (*1)	X (*1)	X (*1)	X (*1)	X (*1)	X (*1)	X (*1)	X (*1)	X (*1)	X (*1)
R3.71	XX	XX	XX	XX	XX (*1)	X (*1)	X (*1)	X (*1)	X (*1)	X (*1)	X (*1)	X (*1)	X (*1)	X (*1)	X (*1)	X (*1)	X (*1)
R3.72	XX	XX	XX	XX	XX	XX	X (*1)	X (*1)	X (*1)	X (*1)	X (*1)	X (*1)	X (*1)	X (*1)	X (*1)	X (*1)	X (*1)
R3.73	XX	XX	XX	XX	XX	XX	XX	X (*1)	X (*1)	X (*1)	X (*1)	X (*1)	X (*1)	X (*1)	X (*1)	X (*1)	X (*1)
R3.74	XX	XX	XX	XX	XX	XX	XX	XX	X (*1)	X (*1)	X (*1)	X (*1)	X (*1)	X (*1)	X (*1)	X (*1)	X (*1)
R3.75	XX	XX	XX	XX	XX	XX	XX	XX	XX	X (*1)	X (*1)	X (*1)	X (*1)	X (*1)	X (*1)	X (*1)	X (*1)
R3.76	XX	XX	XX	XX	XX	XX	XX	XX	XX	XX	X (*1)	X (*1)	X (*1)	X (*1)	X (*1)	X (*1)	X (*1)
R3.77	XX	XX	XX	XX	XX	XX	XX	XX	XX	XX	XX	X (*1)	X (*1)	X (*1)	X (*1)	X (*1)	X (*1)
R3.78.00	XX	XX	XX	XX	XX	XX	XX	XX	XX	XX	XX	XX	X (*1)	X (*1)	X (*1)	X (*1)	X (*1)
R3.78.10	XX	XX	XX	XX	XX	XX	XX	XX	XX	XX	XX	XX	XX	X (*1)	X (*1)	X (*1)	X (*1)
R3.79	XX	XX	XX	XX	XX	XX	XX	XX	XX	XX	XX	XX	XX	XX	X (*1)	X (*1)	X (*1)
R3.80	XX	XX	XX	XX	XX	XX	XX	XX	XX	XX	XX	XX	XX	XX	XX	X (*1)	X (*1)
R3.81	XX	XX	XX	XX	XX	XX	XX	XX	XX	XX	XX	XX	XX	XX	XX	XX	X (*1)
R3.82	XX	XX	XX	XX	XX	XX	XX	XX	XX	XX	XX	XX	XX	XX	XX	XX	XX

XX: Available. Expanded Test Functions of Exaopc is available.
X: Available. However, Expanded Test Functions of Exaopc is not available.

Note: Exaopc Batch server does not support Multiple Project connection function.
*1: Since the Exaopc was released earlier than the CENTUM, the Exaopc may not fully support newly added functions of the CENTUM.

Combinations of Exaopc and CENTUM VP R7.01.00 or later (for NTPF100-S1, NTPF100-SB)

Exaopc	CENTUM VP	
	R7.01.00	R7.01.10
R3.70	X (*1)	X (*1)
R3.71	X (*1)	X (*1)
R3.72	X (*1)	X (*1)
R3.73	X (*1)	X (*1)
R3.74	X (*1)	X (*1)
R3.75	X (*1)	X (*1)
R3.76	X (*1)	X (*1)
R3.77	X (*1)	X (*1)
R3.78.00	X (*1)	X (*1)
R3.78.10	X (*1)	X (*1)
R3.79	X (*1)	X (*1)
R3.80	X (*1)	X (*1)
R3.81	X (*1)	X (*1)
R3.82	XX	XX (*2)

XX: Available. Expanded Test Functions of Exaopc is available.
X: Available. However, Expanded Test Functions of Exaopc is not available.

Note: Exaopc Batch server does not support Multiple Project connection function.
*1: Since the Exaopc was released earlier than the CENTUM, the Exaopc may not fully support newly added functions of the CENTUM.
*2: For Windows Server 2025, apply Exaopc R3.82.02 patch software to Exaopc R3.82.

All Rights Reserved. Copyright © 1999, Yokogawa Electric Corporation

Combinations of Exaopc and CENTUM VP (up to R6.12) (for NTPF100-S6)

Exaopc	CENTUM VP												
	R5.03.20	R5.04	R6.01	R6.02	R6.03	R6.04 R6.05	R6.06	R6.07	R6.07.10	R6.08	R6.09 R6.10	R6.11	R6.12
R3.72	XX	X X (*1)	X (*1)	X (*1)	X (*1)	X (*1)	X (*1)	X (*1)	X (*1)	X (*1)	X (*1)	X (*1)	X (*1)
R3.73	XX	XX	XX	X (*1)	X (*1)	X (*1)	X (*1)	X (*1)	X (*1)	X (*1)	X (*1)	X (*1)	X (*1)
R3.74	XX	XX	XX	XX	X (*1)	X (*1)	X (*1)	X (*1)	X (*1)	X (*1)	X (*1)	X (*1)	X (*1)
R3.75	XX	XX	XX	XX	XX	X (*1)	X (*1)	X (*1)	X (*1)	X (*1)	X (*1)	X (*1)	X (*1)
R3.76	XX	XX	XX	XX	XX	XX	X (*1)	X (*1)	X (*1)	X (*1)	X (*1)	X (*1)	X (*1)
R3.77	XX	XX	XX	XX	XX	XX	XX	X (*1)	X (*1)	X (*1)	X (*1)	X (*1)	X (*1)
R3.78.00	XX	XX	XX	XX	XX	XX	XX	XX	X (*1)	X (*1)	X (*1)	X (*1)	X (*1)
R3.78.10	XX	XX	XX	XX	XX	XX	XX	XX	XX	X (*1)	X (*1)	X (*1)	X (*1)
R3.79	XX	XX	XX	XX	XX	XX	XX	XX	XX	XX	X (*1)	X (*1)	X (*1)
R3.80	XX	XX	XX	XX	XX	XX	XX	XX	XX	XX	XX	X (*1)	X (*1)
R3.81	XX	XX	XX	XX	XX	XX	XX	XX	XX	XX	XX	XX	X (*1)
R3.82	XX	XX	XX	XX	XX	XX	XX	XX	XX	XX	XX	XX	XX

XX: Available. Expanded Test Functions of Exaopc is available.
X: Available. However, Expanded Test Functions of Exaopc is not available

Note: Exaopc R3.72 or later supports “CAMS for HIS”, Exaopc R3.78.10 or later supports UACS (also CENTUM VP R6.07.10 or later).
Use NTPF100-S6 to acquire A&E messages of CAMS for HIS or UACS.
*1: Since the Exaopc was released earlier than the CENTUM, the Exaopc may not fully support newly added functions of the CENTUM.

Combinations of Exaopc and CENTUM VP R7.01.00 or later (for NTPF100-S6)

Exaopc	CENTUM VP	
	R7.01.00	R7.01.10
R3.72	X (*1)	X (*1)
R3.73	X (*1)	X (*1)
R3.74	X (*1)	X (*1)
R3.75	X (*1)	X (*1)
R3.76	X (*1)	X (*1)
R3.77	X (*1)	X (*1)
R3.78.00	X (*1)	X (*1)
R3.78.10	X (*1)	X (*1)
R3.79	X (*1)	X (*1)
R3.80	X (*1)	X (*1)
R3.81	X (*1)	X (*1)
R3.82	XX	XX (*2)

XX: Available. Expanded Test Functions of Exaopc is available.
X: Available. However, Expanded Test Functions of Exaopc is not available

Note: Exaopc R3.72 or later supports “CAMS for HIS”, Exaopc R3.78.10 or later supports UACS (also CENTUM VP R6.07.10 or later).
Use NTPF100-S6 to acquire A&E messages of CAMS for HIS or UACS.
*1: Since the Exaopc was released earlier than the CENTUM, the Exaopc may not fully support newly added functions of the CENTUM.
*2: For Windows Server 2025, apply Exaopc R3.82.02 patch software to Exaopc R3.82.

All Rights Reserved. Copyright © 1999, Yokogawa Electric Corporation

● Limitations in coexistence with Solution-based software packages (SBP) (*1)

In case one or more SBP products (*2) and the Exaopc reside in a single PC, it is called “coexistent.”
The applicable combination of a server and client(s) for Exaopc and other SBP products is as shown below.
Use the latest release numbers of the SBP products at the release of Exaopc R3.82.

*1: Please check not only the model and version of the package but also the compatibility of the operating system environment.
*2: Exaopc OPC UA, Exaquantum, Exaquantum/Batch, and Exapilot

The combination of SBP Products and Exaopc to be coexistent is as show below.

	Exaopc OPC UA (R3.82)	Exapilot (R4.04)	Exaquantum (R3.60) (*1)	Exaquantum/Batch	Exaplog (R3.40)	Platform for Advanced Control and Estimation (PACE) (R5.05.10)
Exaopc (R3.82)	N/A	OK	OK	N/A	N/A	OK

OK: Applicable N/A: Not Applicable

Note: When Exaopc resides with other SBP products, all the IT Security models must be identical.
Please contact Yokogawa when Exaopc resides with other revisions.
If the SBP package does not support IT Security Version 3.0, Version 3.0 cannot be configured when coexisting.
*1: Set Exaopc IT Security to “Legacy model”. As Windows 11 is not supported the “Legacy model”, Exaopc cannot coexist with Windows 11.

● Remarks when connecting Exaopc with other SBP products via network

Please consider to set the IT security level of each SBP products as the same level as the security model when it is resided with Exaopc, even when it is connected via network.

● Document Browser

Adobe Acrobat Reader

Note: It is necessary to install Adobe Reader to read document of Exaopc.

■ SUPPORTED OPC SPECIFICATIONS

The Exaopc package provides the OPC client with an interface with the following specifications:

● DA Server

- OPC Data Access Custom Interface Specification Version 2.05a/3.0
- OPC Data Access Automation Specification Version 2.0
- OPC Security Custom Interface Specification Version 1.0

● A&E Server

- OPC Alarms and Events Version 1.10 (Exaopc R3.10 or later) (*1)
- OPC Alarms and Events Automation Specification Version 1.0 (draft)
- OPC Security Custom Interface Specification Version 1.0

*1: OPC Alarms and Events Version 1.0 had been supported by Exaopc R3.01.50 or earlier.
The specification range of the “severity” for the SetFilter method is changed from “0 to 1000” (A&E1.0) to “1 to 1000” (A&E1.10).
When “severity=0 value” is set for the SetFilter method to Exaopc A&E1.10 OPC server, an error code will be returned by Exaopc because it is out of range.
Be sure to use A&E version compatible with both Exaopc and an OPC client accordingly.

● HDA Server

- OPC Historical Data Access Custom Interface Version 1.2
- OPC Historical Data Access Automation Interface Version 1.0 (draft)
- OPC Security Custom Interface Specification Version 1.0

● Batch Server

- OPC Batch Custom Interface Specification Version 1.0
- OPC Batch Automation Specification Version 1.0
- OPC Security Custom Interface Specification Version 1.0

Visit the web site of OPC Foundation at http://www.opcfoundation.org for OPC interfaces.

All Rights Reserved. Copyright © 1999, Yokogawa Electric Corporation

■ ANNUAL MAINTENANCE CONTRACT

The product is supplied without the manufacturer's warranty costs. Users are required to enter into an annual maintenance contract to receive maintenance service from the first year of the purchase onward.

For more details of the maintenance service, please refer to "Maintenance Services for Solution-Based Software Package" (GS 36J20A10-01E).

An Annual Maintenance Contract is necessary for each software package.

- Exaopc (NTPF100)
- Vnet/IP interface package for HY-V (NTPF330) in the case of using Virtualization platform (HY-V)
- Vnet/IP interface package for VM-W (NT3PF350) in the case of using Virtualization platform (VM-W)
- Dual-redundant PF Versatile License (FT2SDR01) in the case of using "Dual-redundant Platform for Computer"

■ MODEL AND SUFFIX CODE

Exaopc OPC Interface Package

		Description
Model	NTPF100	Exaopc OPC Interface Package
Suffix Codes	-S	Basic Software License (with media)
	1	For CENTUM VP, CENTUM VP Entry Class (DA, A&E, HDA Server Functions)
	6	For CENTUM VP (Support "CAMS for HIS"/UACS, DA, A&E, HDA Server Functions) (*1)
	B	For VP Batch (DA, A&E, HDA, Batch Server Functions; Exaopc/Batch) (*2) (*5)
	X	For OPC Server Redundancy (Exaopc-RD) (*3) (*5)
	1	English version
Option Codes	/Y-QTM	For Yokogawa OPC Clients: Exaquantum
	/Y-PLT	For Yokogawa OPC Clients: Exapilot (*4)
	/Y-SMC	For Yokogawa OPC Clients: Platform for Advanced Control and Estimation - Multivariable Optimizing Control
	/Y-RQE	For Yokogawa OPC Clients: Platform for Advanced Control and Estimation - Robust Quality Estimation
	/Y-OMS	For Yokogawa OPC Clients: Exaoms
	/Y-TRF	For Yokogawa OPC Clients: TriFellows
	/Y-OTH	For Yokogawa OPC Clients: Other than listed above

*1: A&E server supports the following Alarm Management functions of CENTUM VP.
- Basic alarm management
- Exaopc R3.72 or later supports for "Consolidated Alarm Management Software (CAMS) for HIS"
- Exaopc R3.78.10 or later supports for "Unified Alarms and Conditions Server (UACS)"

*2: Exclusively used for Exaquantum/Batch.
*3: Exclusively used for Exaquantum or Exapilot.
*4: AAASuite (Advanced Alarm Administrator) Alarm Rationalization Assistance Package is included.
*5: Please contact Yokogawa for purchasing the Suffix Codes "-SB" or "-SX".

Maintenance Service for Exaopc

		Description
Model	SV3NTMF100	Maintenance Service for Exaopc
Suffix Codes	-S	Annual Contract
	1	For CENTUM VP/CENTUM CS 3000
	6	For CENTUM VP (Support "CAMS for HIS"/UACS)
	B	For CENTUM VP/CENTUM CS 3000 (Exaopc/Batch)
	X	For OPC Server Redundancy (Exaopc-RD)
	1	Always 1
	-N	New
	-R	Renewal

All Rights Reserved. Copyright © 1999, Yokogawa Electric Corporation

■ ORDERING INFORMATION

Specify the model, suffix code(s), and option code(s).

■ TRADEMARK ACKNOWLEDGMENT

The names of corporations, organizations, products and logos herein are either registered trademarks or trademarks of Yokogawa Electric Corporation and their respective holders.

All Rights Reserved. Copyright © 1999, Yokogawa Electric Corporation
Subject to change without notice.