General Specifications

Collaborative Information Server

GS 36K01A10-01EN

■ GENERAL

The Collaborative Information Server (CI Server) is an integrated operation and monitoring system that can connect to any equipment and systems in the plant and integrate them.

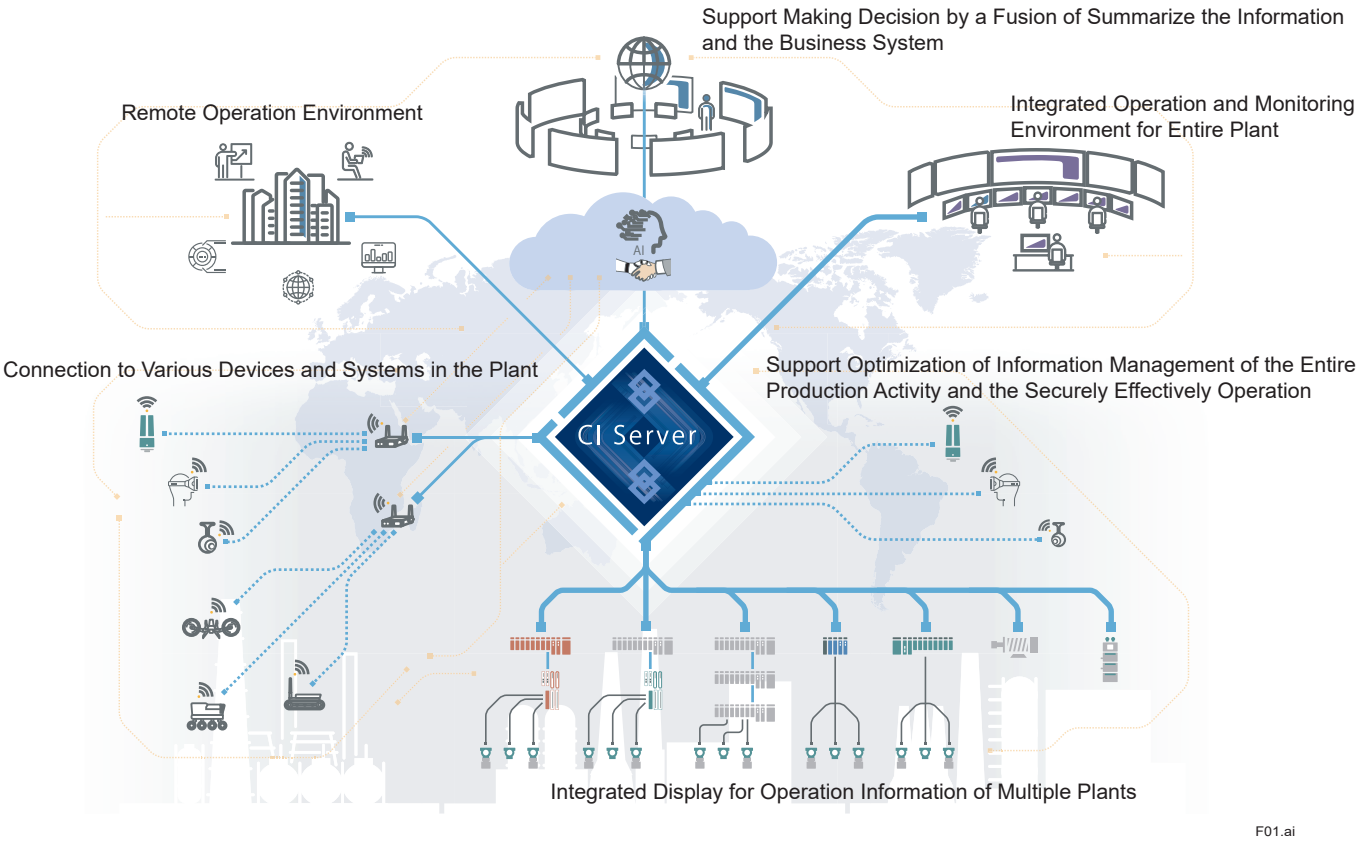

Figure Image of grasping and operating the entire production activity by utilizing CI Server

● Integrated Operation and Monitoring and Remote Operation

- Connects every device and system in a plant and grasp current accurate plant situation.
- Monitoring targets can be added, deleted, and modified even while operating the system.
- Since CI Server has dedicated interfaces for controllers widely used on the market and open interfaces that meet standards, integrated management is possible not only for Yokogawa products but also for other companies' products.
- Connects with any Cloud environment and IT systems. Supports RESTful API, an interface for calling web systems via HTTPS to facilitate integration with Cloud applications and IT. (*1)
- Collects the information of devices such as device status and parameter values from Plant Resource Manager (PRM) and utilizes it. (*2)

*1: Supported by R1.04 or later.
*2: Linkage between PRM and CI Server is supported by PRM R4.06 or later and CI Server R1.02 or later. For details of PRM connection, refer to "Plant Resource Manager" (GS 30B05A10-01EN).

Yokogawa Electric Corporation
2-9-32, Nakacho, Musashino-shi, Tokyo, 180-8750 Japan
GS 36K01A10-01EN
©Copyright Jan. 2021 (YK)
21st Edition Nov. 19, 2026 (YK)

● Optimize Management System of Information

- Integrate and display operation information of multiple plants and contribute optimization for information management of entire production activity.
- Behavior at alarm occurrence and how the alarms are represented to users can be configured for each data.
- Creates reports on plant operation information and outputs it whenever requested.
- Saves the operation record as an audit trail.
- By adding an option library, data changes can be made in accordance with the pharmaceutical regulations (e.g. main parameter change). Supports input of operator and authenticator information and the reason for change when manipulating important parameters such as CPP (Critical Process Parameter), Alarm limit, Alarm ack. These operation histories can be saved in the audit trail.

● Security

- Supports safely effectively operation by performing various security measures such as supporting secure communication.
- The area of operation and monitoring can be set for each user using the system.

■ SYSTEM CONFIGURATION

CI Server can flexibly configure according to the plant architecture and business style from standalone configuration, in which single computer provides environment of data collection, operation, and monitoring, to integrated configuration, in which multiple servers are hierarchically deployed to perform integrated monitoring of the entire plant.

● Functional Components

CI Server consists of functional components below. The system configuration is determined by allocating these components on the server computers and client computers.

Functional component	Description
CI Core	Collects, stores, and calculates plant operation data, and links data with other CI Core and other systems
CI Portal	Provides the data collected and stored by CI Core and predefined screens to CI View
CI View	HMI for operation and monitoring, which uses a web browser
CI Gateway	Data gateway version of CI Core without HMI functionality Collects and publishes data to CI Core or upper layer systems with support of industrial interfaces, such as OPC UA CI View cannot be connected to CI Gateway

● Flexible System Configuration

CI Server provides best fit system architectures by setting functional components as required.

Followings are some examples:

- Standalone configuration
- Remote CI Portal/CI View configuration
- Enterprise configuration
- Gateway configuration
- Host-to-host connection configuration
- Yokogawa Cloud configuration (*1)

Note: Co-existence of CI Core/CI Portal/CI View and PRM in the same computer is supported by R1.05 or later.

*1: Yokogawa Cloud is an industrial transformation and IoT platform that accelerates the development and deployment of industrial cloud applications. It supports the ingestion, processing, and curation of data from various sources, provides industry-specific algorithms and models, and integrates across applications to support insightful decision-making and higher levels of automation.
https://www.yokogawa.com/solutions/solutions/digital-transformation/yokogawa-cloud/

All Rights Reserved. Copyright © 2021, Yokogawa Electric Corporation

Standalone Configuration
In this configuration, data collection, monitoring, operation, and engineering of CI Server are all inclusively run on a single computer.

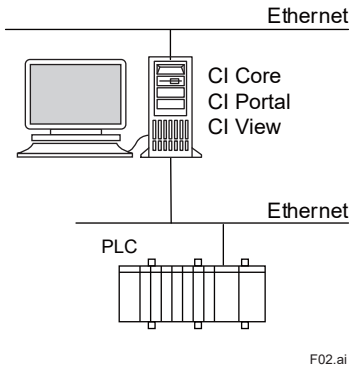

Figure Example of Standalone Configuration

Remote CI Portal/Remote CI View Configuration
This configuration improves system scalability by separating CI Core responsible for data collection and application execution, and CI Portal used for engineering and operation and monitoring. Multiple number of CI Portal can be placed according to the number and the placement location of CI View in order to ensure performance for such as large scale system.

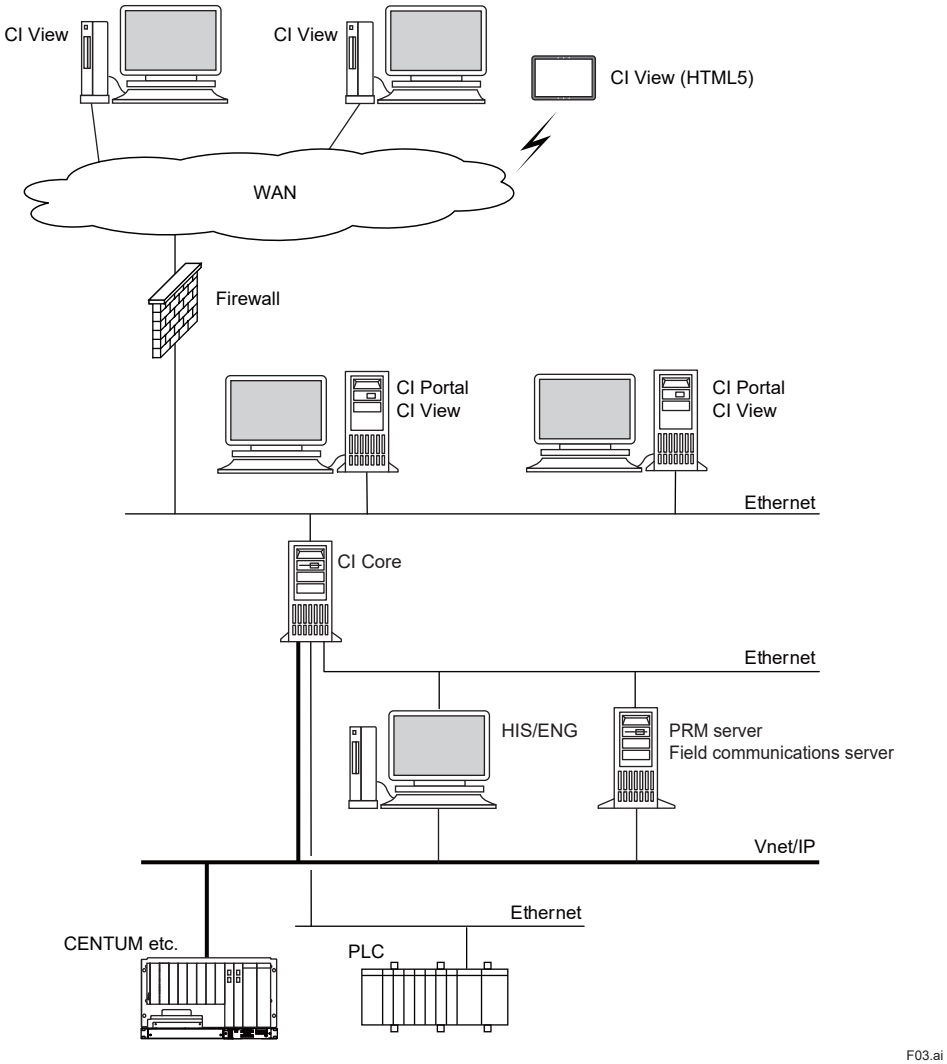

Figure Example of Remote CI Portal/Remote CI View Configuration

All Rights Reserved. Copyright © 2021, Yokogawa Electric Corporation

Enterprise Configuration
By deploying the functional components on multiple computers, large-scale integrated operation and monitoring become possible, and only the information required for each business level can be collected.

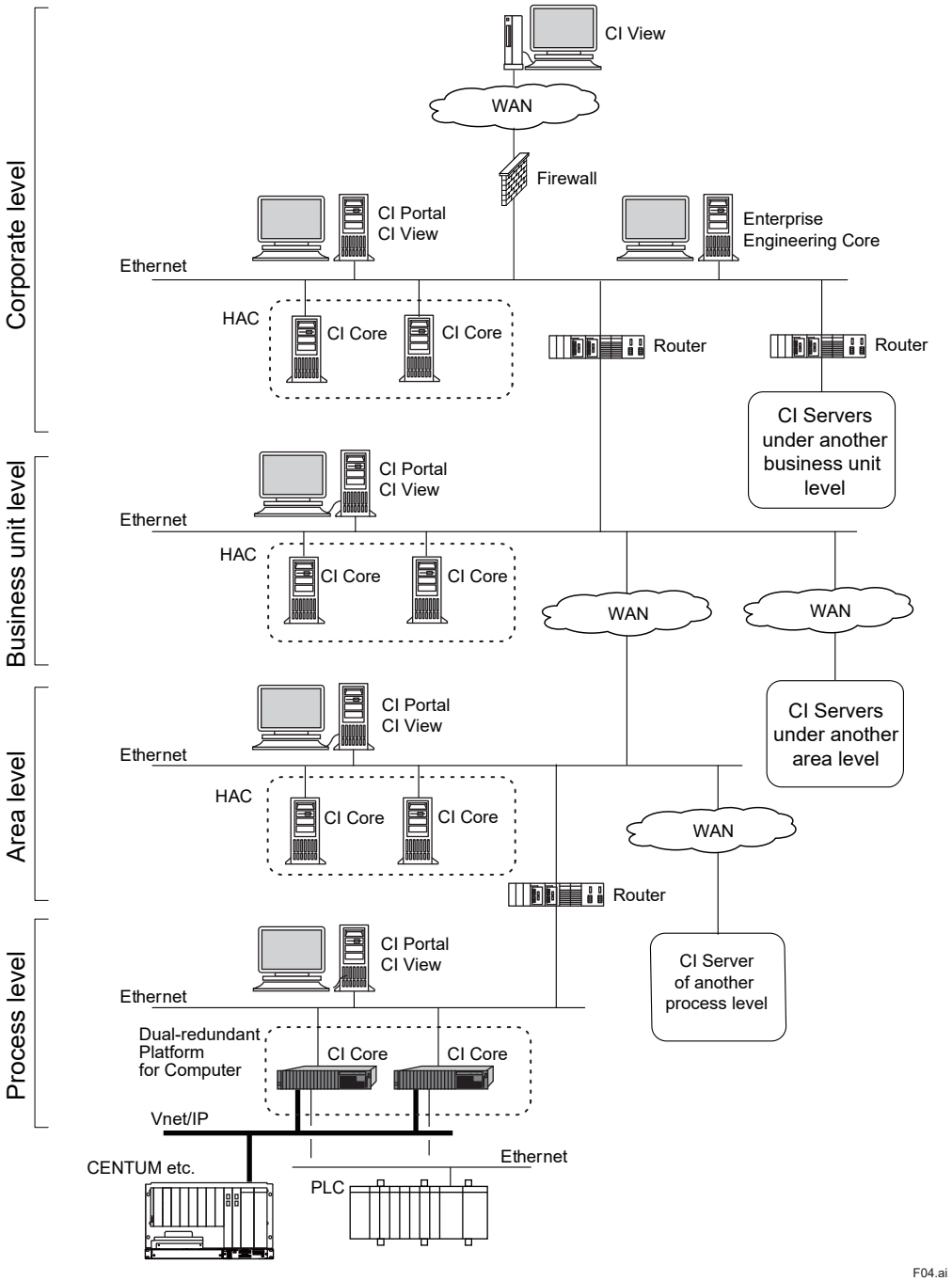

Figure Example of Enterprise Configuration

Enterprise engineering core for engineering use in enterprise configuration can be utilized for more efficiently engineering. (*1) Enterprise engineering core engineerings all CI servers at once, loads engineering data, and is located on network accessible each server.

*1: Enterprise configuration can be architected even if enterprise engineering core is not used.

In case of Enterprise configuration, the following component is used also in addition to “●Functional Components” as described earlier.

Functional component	Description
Enterprise Engineering Core	A dedicated engineering server which is used to build systems in an enterprise configuration.

All Rights Reserved. Copyright © 2021, Yokogawa Electric Corporation

- Process level
  Refers to the level of direct control of processes, where control systems for each process and CI Server for integrated monitoring of them are deployed. This level includes local DCS/PLC systems and automated control/ monitoring equipment that interact directly with the process.
- Area level
  Refers to the level of integrated monitoring of multiple processes. At this level, the total production in the area is controlled and production KPIs are provided.
- Business unit level
  Refers to the level of integrated monitoring of multiple areas and represents the entire business unit. Data for optimizing production and asset data are accessed.
- Corporate level
  Refers to the level that represents the entire business of the enterprise. At this level, all KPIs of all the business units are collected and aggregated, and it is responsible for managing the performance of the entire enterprise in real time.

Gateway Configuration
This configuration passes data to CI Core or in-house/third party systems that summarizes information via CI Gateway.

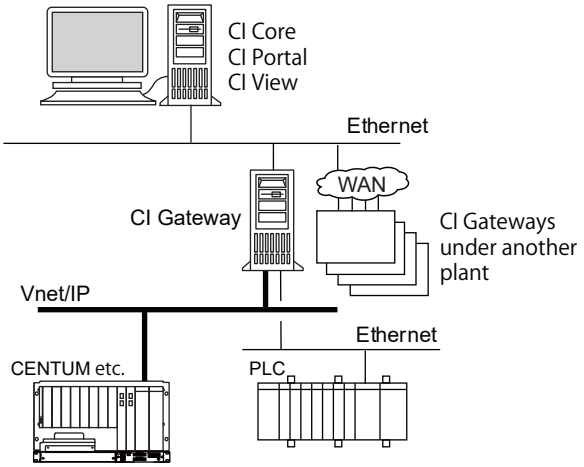

F05.ai

Figure Example of Gateway Configuration (CI Core)

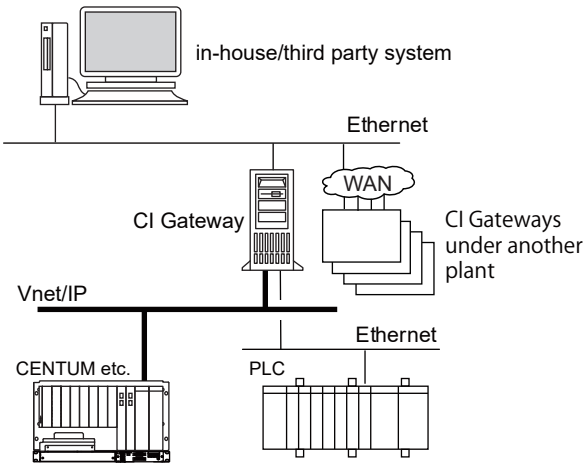

F15.ai

Figure Example of Gateway Configuration (in-house/third party system)

All Rights Reserved. Copyright © 2021, Yokogawa Electric Corporation

Host-to-host Connection Configuration

Real-time data can be exchanged between CI Core or CI Gateway running independently. This configuration is for a system which CI Core in the central location communicates to remotely located CI Core.

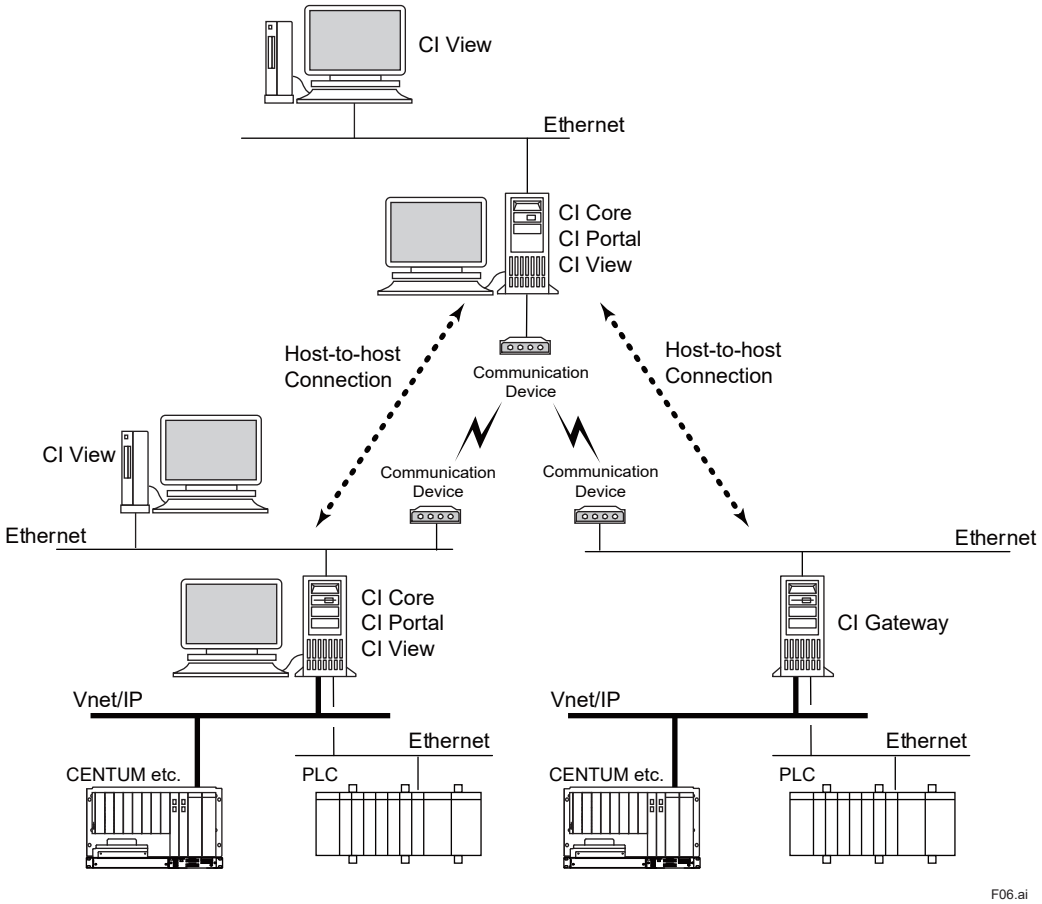

Figure Example of Host-to-host Connection Configuration

All Rights Reserved. Copyright © 2021, Yokogawa Electric Corporation

Yokogawa Cloud Configuration

CI Server can use in a PaaS (Platform as a Service) format that combines Yokogawa Cloud, a software license, and maintenance. This solution facilitates the optimized management of production activities across an entire enterprise, while also providing a remote operation environment to ensure efficient plant operations from any location.

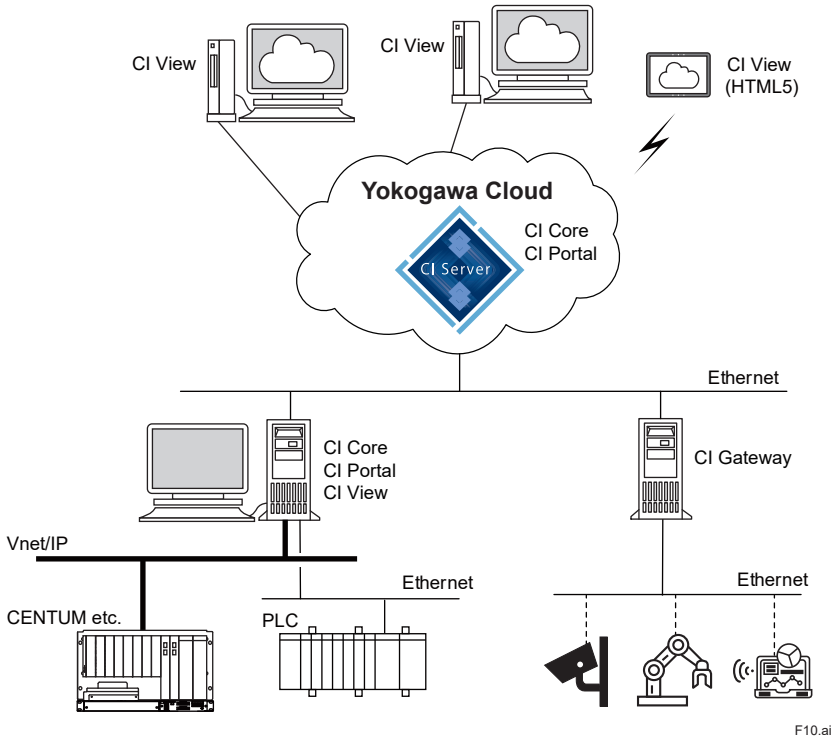

Figure Example of Yokogawa Cloud Configuration

All Rights Reserved. Copyright © 2021, Yokogawa Electric Corporation

● High Availability

Two types of redundant configurations are available.

	HAC (High Availability Computing)	Dual-redundant Platform for Computer
Features	Active-Standby method	Active-Standby method
	Dual, Triple, and Quad redundant configurations are possible.	Dual-redundant configuration is possible.
	Capable of handling large amount of data.	Switchover within 1 second without data loss during switching.
	Redundant configuration over remote locations is possible (*1)	Configured with two computers installed in the same place.
Handling on the network	The two computers have different IP addresses. If a server is switched due to a failure, CI Portal automatically switches connection to the new server on active side, so there is no need to switch the connection in CI View.	The two computers making up the redundancy feature are treated as one computer on the system. They have the same IP address, and the other computers do not need to be aware of the state of redundant operation (for example, which computer is the "active side"), and access can be made in the same way as in a non-redundant configuration.
Triggers for automatic switching	Hardware failure, software failure	Hardware failure
Specified hardware models	No	Yes (*2)

Note: It's recommended to use Dual-redundant Platform for Computer common dual-redundant configuration for Yokogawa system products in case connecting with Vnet/IP.

*1: For Disaster Recovery (response in case of disaster, etc.) purposes, redundancy can be configured regardless of distance between servers.

*2: The computers used for Dual-redundant Platform for Computer are limited to the models specified by Yokogawa. For details, refer to "Dual-redundant Platform for Computer" (GS 30A05C10-01E).

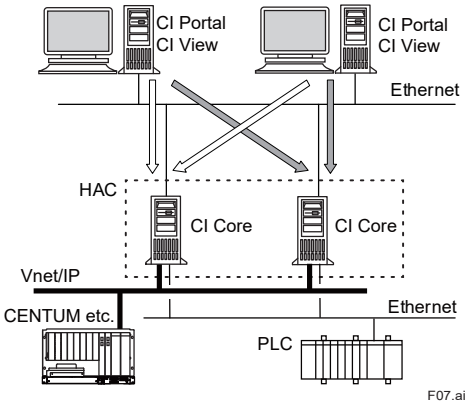

Figure Example of HAC Configuration

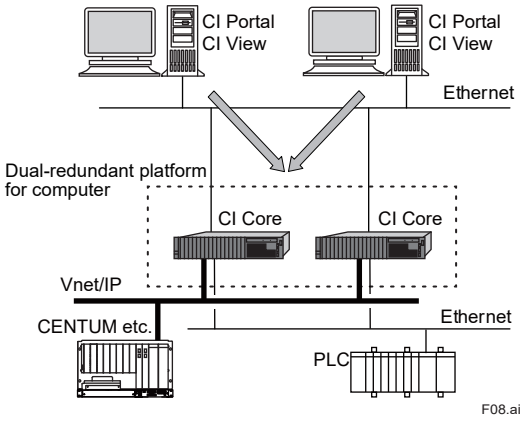

Figure Example of Dual-redundant Platform for Computer Configuration

All Rights Reserved. Copyright © 2021, Yokogawa Electric Corporation

■ EXTERNAL INTERFACE

CI Server supports industry standards such as OPC UA and ODBC. CI Server supports native communication drivers to Yokogawa products as well as various controllers of 3rd parties.

● Linkage with External Applications

Interface	Option Code	Description
OPC Classic client (*1)	(*3)	OPC DA v2.04 OPC A&E v1.02
OPC Classic server (*1)	/PCD□□	OPC DA v2.04 OPC A&E v1.02
OPC Classic Tunneller (*1)	/PCT□□	OPC DA Server/Client, OPC A&E Server Tunneller This function is needed to the computer installed 3rd-parties' OPC Classic Server/Client to communicate with CI Server via secure communication used among CI Core.
OPC UA client (*2) (*4)	(*3)	OPC UA DA v1.04 OPC UA A&C v1.04 Supports redundant communication with OPC UA server
OPC UA server (*2) (*4)	/PCU□□	OPC UA DA v1.04 OPC UA A&C v1.04 OPC UA HA v1.04 In addition to CI server's own information model, it also supports information models from other OPC UA companion specifications by importing NodeSet files.
OPC UA PubSub (*2)		OPC UA v1.04
ODBC server (*1)	/PDB□□	For both process and configuration data, ODBC API conformance level "Core", SQL conformance level "minimum". 32-bit/64-bit is supported
MQTT (*2)	(*3)	MQTT 3.1.1 Communication with lower and higher targets (IIOT devices) by MQTT protocol.
RDBMS (Relational DataBase Management System) connection (*1)	(*3)	Supported RDBMS: MS SQL Server 2016 SP2 or later. Data can be sent and received to/from applications that use RDBMS through the RDBMS. CI Core connects to the RDBMS and synchronizes data between CI Core and the RDBMS. When CI Core data is changed, it is copied to the RDBMS.

*1: Supported on Windows OS only.
*2: Supported on Windows OS and Linux OS.
*3: Supported as standard function and does not need to select any Option Codes when ordering.
*4: The Windows OS of CI Server R1.01.01 or later (model name: CS2CLC) is acquired OPC UA certification from the OPC Foundation.

OPC UA CERTIFIED

Certified profiles R1.01.01 to R1.03.0D

Application	Profile Group	Category	Supported Profiles and Facets
OPC UA Server	UACore R1.04	Certified Profiles	Standard 2017 UA Server Profile
OPC UA Server	UACore R1.04	Security Policies	SecurityPolicy – None SecurityPolicy – Basic128Rsa15 SecurityPolicy – Basic256 SecurityPolicy [A] Aes128-Sha256-RsaOaep SecurityPolicy [B] – Basic256Sha256 SecurityPolicy Aes256-Sha256-RsaPss
OPC UA Server	UACore R1.04	User Identify Tokens	User Token Anonymous User Token User Name Password User Token X509 Certificates
OPC UA Client	UACore R1.04	Certified Profiles	Minimum UA Client Profile

All Rights Reserved. Copyright © 2021, Yokogawa Electric Corporation

Application	Profile Group	Category	Supported Profiles and Facets
OPC UA Client	UACore R1.04	Additional Facets	Core 2017 Client Facet Base Client Behaviour Facet Discovery Client Facet Subnet Discovery Client Facet AddressSpace Lookup Client Facet Entry Level Support 2015 Client Facet Attribute Write Client Facet DataChange Subscriber Client Facet Method Client Facet
OPC UA Client	UACore R1.04	Security Policies	SecurityPolicy – None SecurityPolicy – Basic128Rsa15 SecurityPolicy – Basic256 SecurityPolicy [A] Aes128-Sha256-RsaOaep SecurityPolicy [B] – Basic256Sha256 SecurityPolicy Aes256-Sha256-RsaPss
OPC UA Client	UACore R1.04	User Identify Tokens	User Token Anonymous User Token User Name Password

Certified profiles R1.03.0E or later

Application	Profile Group	Category	Supported Profiles and Facets
OPC UA Server	UACore R1.04	Certified Profiles	Standard 2017 UA Server Profile
OPC UA Server	UACore R1.04	Security Policies	SecurityPolicy – None SecurityPolicy – Basic128Rsa15 SecurityPolicy – Basic256 SecurityPolicy [A] Aes128-Sha256-RsaOaep SecurityPolicy [B] – Basic256Sha256 SecurityPolicy Aes256-Sha256-RsaPss
OPC UA Server	UACore R1.04	User Identify Tokens	User Token Anonymous User Token User Name Password User Token X509 Certificates
OPC UA Client	UACore R1.04	Certified Profiles	Minimum UA Client Profile
OPC UA Client	UACore R1.04	Additional Facets	Core 2017 Client Facet Base Client Behaviour Facet Discovery Client Facet Subnet Discovery Client Facet AddressSpace Lookup Client Facet Entry Level Support 2015 Client Facet Attribute Write Client Facet DataChange Subscriber Client Facet Method Client Facet
OPC UA Client	MDIS 1.3	Companion Facets	MDIS Base Client Facet MDIS Valve Model Client Facet MDIS Instrument Model Client Facet MDIS Instrument Out Model Client Facet MDIS Instrument Arbitration Model Client Facet MDIS Discrete Model Client Facet MDIS Discrete Out Model Client Facet MDIS Discrete Arbitration Model Client Facet MDIS Digital Model Client Facet MDIS Digital Out Model Client Facet MDIS Digital Arbitration Model Client Facet MDIS Choke Model Client Facet MDIS Electric Choke Model Client Facet MDIS Motor Model Client Facet MDIS CIMV Model Client Facet MDIS TimeSync Object Client Facet
OPC UA Client	UACore R1.04	Security Policies	SecurityPolicy – None SecurityPolicy – Basic128Rsa15 SecurityPolicy – Basic256 SecurityPolicy [A] Aes128-Sha256-RsaOaep SecurityPolicy [B] – Basic256Sha256 SecurityPolicy Aes256-Sha256-RsaPss
OPC UA Client	UACore R1.04	User Identify Tokens	User Token Anonymous User Token User Name Password

All Rights Reserved. Copyright © 2021, Yokogawa Electric Corporation

● External Controller Connection

Interface	Option Code	Description
Yokogawa Vnet/IP (*1)	/FCA□□ or /FCS□□ /SCA□□ or /SCS□□ /UGA□□ or /UGS□□	CENTUM VP R5.01.20 or later ProSafe-RS R2.02 or later
Yokogawa STARDOM (*1)	(*3)	FCN/FCJ R2.01 or later
Yokogawa DAQSTATION (*1)		Please contact Yokogawa for details.
Yokogawa DAQMASTER (*1)		Please contact Yokogawa for details.
Yokogawa SMARTDAC+ (*1)		Please contact Yokogawa for details.
Yokogawa FA-M3 (*1)		Please contact Yokogawa for details.
Modbus slave (*1)		Serial, TCP/IP
Modbus master (*1)		Serial, TCP/IP
AC Gateway client		
Yokogawa Vnet/IP softstack (*1)	/DVN□□	Dedicated Virtualization platform
IEC 60870-5 client (*1)	/DEC□□	IEC 60870-5-101/102/103/104
IEC 61850 client (*4)	/DEP□□	Supports MMS specifications and can read and write from/to tags. Includes SISCO stock layer software.
DNP3 master	/DDN□□	Please contact Yokogawa for the compatible functions.
WITS level 0 slave (*1)	/DWS□□	Well site Information Transfer Specification (WITS)
WITS level 0 master (*1)	/DWM□□	Well site Information Transfer Specification (WITS)
HEX repeater	/DHE□□	
Rockwell Automation (*1)	/DRC□□	Rockwell Allen Bradley CIP, Rockwell Allen Bradley DF1, Rockwell Allen Bradley DH+, Rockwell Allen Bradley PLC5
Siemens (*1)	/DSE□□	Siemens 3964R, Siemens SAPI-S7 (SIMATIC.NET SAPI-7 software package is required.)
Emerson	/DBB□□	Emerson Bristol Babcock, BSAP
	/DFR□□	Emerson Fisher ROC
MELSEC (*2)	/DME□□	
OMRON	/DMR□□	OMRON FINS
Telemetry integration environment	/DTE□□	Telemetry Integration Environment (TIE870-5 client)
HART router	/DHA□□	
Beckhoff ADS (*1)	/DBA□□	
Beckhoff BK8100	/DBK□□	
Bachmann M1COM	/DBM□□	

Note: Please contact Yokogawa for connectable versions.
*1: Supported on Windows OS only.
*2: Supported on Windows client OS only.
*3: Supported as standard function and does not need to select any Option Codes when ordering.
*4: CI Server R1.04.03 or later on Windows OS is IEC 61850 certified by DNV.
Conformity Standards (Client system)
IEC 61850 Edition 2 Amendment 1 Parts 6, 7-1, 7-2, 7-3, 7-4 and 8-1

All Rights Reserved. Copyright © 2021, Yokogawa Electric Corporation

■ SECURITY

Security-related functions include IT security function, encrypted communication, user management, and audit trailing. In addition, Yokogawa's Endpoint Security Service can be applied.

● IT Security Function

This function uses the security function of Windows OS to fortify the CI Server components. IT Security Tool is provided to configure this feature. This tool is commonly installed in Yokogawa system products and enables configuration of security settings. The following threats are addressed:

Threat	Description
Attack over the network	Threats from unauthorized persons through networks, which affect the system or steal important data.
Direct attack by terminal operation	Threats from unauthorized persons who operate terminals, which affect the system or steal important data.
Computer/data theft	Threats where computers with important data are stolen.

The applicable security measures are classified into the following types.

Measure	Description
Access control	Restricts access to files, folders, registries, and programs.
Personal firewall tuning	Controls communications among computers on the network.
Stopping unused Windows services	Stops programs and services that are not in use.
Changing IT environment settings	Enables strong Windows security measures.
Applying group policy settings	Enables centralized management of security policies for computers connected to the same domain.

● Encrypted Communication

The following encrypted communications are supported:

- Encryption of communications among CI Servers
  Communication between CI Portal and CI View: Secure Sockets Layer (SSL) is used.
  Communication between CI Core and communication between CI Core and CI Portal: Secure UDP communications and public/private keys are used.
  Communication between CI Server and REST API : HTTPS (Secure Sockets Layer) communication is used.
- Encryption of OPC UA communication
  By using the encryption function of OPC UA, secure and reliable communication is available.

● User Management

The following authorizations can be set by users:

- Operating and displaying windows
- Operating devices and data
- Generating reports and trends
- Alarm management, notification, and acknowledgment
- Operation log (automatic or manual)
- Scope of engineering

The following user authentications are available:

- Authentication by CI Server (Authentication by Windows can be used together)
- Integration with Windows user authentication process and account settings
  Single sign-on (SSO) can be used by integrating with Active Directory. Using the Simple and Protected GSS-API Negotiation mechanism (SPNEGO), which is a standard method for user authentication of web servers, web authentication by SSO is supported for HTTP requests.

All Rights Reserved. Copyright © 2021, Yokogawa Electric Corporation

● Audit Trail

Logon/logout history and operation records for data are saved as an audit trail. Audit trail data can be displayed on the screen and output as reports. Also, the operations and data to save as an audit trail can be defined.

Items saved are as follows:

- Events
  - -Login, logout, login failure
  - -Insert, change, delete data (by operator or application)
  - -Alarm acknowledgment (by operator or application)
  - -Alarm shelving and un-shelving operations
- Event occurrence time stamp
- Name of the user who operated
- Name of the computer on which the operation was performed
- Values before and after the change (For example, when changing data, the values before and after the change will be saved.)
- Event related items
  - -Data name
  - -Program name
  - -Alarm notification destination
  - -Users to notify of alarms
  - -User profile
  - -Controller interface
- Name of the program that generated the event
- Information for each application (if any application is created in the project)

● Endpoint Security Service

Yokogawa's Endpoint Security Service is provided to reduce the risk of malware infection on Windows PCs and servers and helps maintain system health throughout the life cycle.

Anti-virus Software
The anti-virus software is dedicated for Yokogawa control systems based on the Trellix's intrusion prevention technologies. This product is used as standard anti-virus software for Yokogawa IA systems.

Whitelisting Software (*1)
The whitelisting software is the security measure software using the Trellix's application control technologies and with whitelist method provided with the optimum settings for Yokogawa control systems. This product is used at malware measure service for Yokogawa IA systems.

For more details, please refer to the GS 43D02T30-02E "Endpoint Security Service".

*1: The whitelisting software is not supported on Windows 11 Pro or Windows 10 Enterprise LTSC 2021 (including IoT version for OEM use).

All Rights Reserved. Copyright © 2021, Yokogawa Electric Corporation

■ HMI FUNCTION

● Features

- Operability
  CI Server enables users to freely create operation and monitoring windows based on ergonomics and the guidelines stipulated by companies or in projects, and supports efficient operation and monitoring. Screen operations such as zooming and scrolling are also provided as standard functions.
- HTML5 support
  Operation and monitoring windows support HTML5 format for displaying on Web browser and mobile devices
- Flexible Graphic Deployment
  The operation and monitoring windows are freely configured by combining the standard parts such as process data, alarms, historical trends, real-time trends, faceplates, reports, and event history, and parts created for each project. Multiple layers and visibility groups can be set for each window, and they can be shown or hidden according to user authorizations, process conditions, and the zoom level.
  With CENTUM VP "Server for Remote Operation and Monitoring Function," desktop screens such as HIS and PRM can be securely called (*1).
- HMI with high visual effect
  The built-in ISA-101 compliant symbol library enables easy creation of HMI with high visual effects. Advanced Operating Graphics (AOG), a consulting service provided by Yokogawa, is supported.
- Various data sources
  Dashboard screens can be easily displayed because of the ability to display information from a variety of data sources such as video streaming (such as camcorders) and websites.
- Multi-node input
  Data collected from multiple CI Core can be integrated and displayed on a single operation and monitoring window. For example, it is possible to collect from each CI Core only the data requested in a certain management level and display them.

*1: supported by R1.05 or later

● Trend Graph

Real-time data and historical data are displayed seamlessly. The user interface is easy to operate and allows for efficient trend configuration.

Pen assignments to the trend graphs, display items, and display format may be configured both at the engineering stage and during operation and monitoring. From the trend screen, it is possible to save the configuration data for multiple trends and call up the trends.

Key features:

- Maximum number of pens: 50 per one trend component
- Minimum displayable time unit: 1 ms
- Minimum update cycle: 1 second
- Maximum display time span: No limit
- Number of storable trends: Depends on disk capacity
  Save, call up, print, and protect trends
- Export trend data and images (bitmap, CSV file)
- Setting accessible users
- 2D/3D/tabular rendering
- Line segment graph/steps graph/scatter chart/area chart
- XY plots
- Show/hide legend and scale
- Reversing of time and value axis
- Scale fonts
- Trend display in absolute time/relative time and shift time span
- Display alarm status on the hairline
- Linked display of trend and alarm overview
- Pen assignment by drag-and-drop
- Range-scale and time-scale zoom function (XY-axis simultaneous zooming with rectangular selection is also possible)
- Show/hide value slider, time slider, time control, 3D control, hairline, and pen panel
- Micro Trend (small size simplified trend available for ISA-101-compliant screens)
- DTS Trend (trend display of 3D data acquired from Yokogawa DTSX optical fiber temperature sensor devices, that is, temperature, distance, time data collected at each point along the optical fiber cable)

All Rights Reserved. Copyright © 2021, Yokogawa Electric Corporation

■ HISTORICAL

● Historical Data

All data handled in CI Server can be saved as historical data. The types of data are as follows:

- Data (data collected from the systems and controllers, internal calculation data)
- Alarm
- Audit Trail
- System log

Historical data can be output to the following:

- Screen display
- Trend
- Report
- Text file

The following timing can be specified to save historical data:

- Save periodically
- Save on event (when the value changes, etc.)

● Aggregations

The aggregation calculation function is provided for creating daily reports, monthly reports, etc.

- Aggregation cycle
  30 minutes, hourly, shift-based, daily, weekly, monthly, and yearly aggregation
- Aggregation function
  Minimum, maximum, mean, integral, standard deviation, counter, and differential summation

● Report

Historical data and configuration information can be output as tabular or time-series reports.

Item	Description
Format	Freely configurable
Output destination	Selectable from graphic display, file, and printer by report
Generation timing	Automatically created at the specified time, fixed cycle, or event occurrence. On-demand manual creation is also possible

● Excel Add-in Report

Reports can also be created by using Excel Add-in. Making it easy to create reports such as daily and monthly reports and analyze process data because data in CI Core can be acquired via a work book. Since the range of accessible data can be limited by each user, secure data retrieval is ensured.

All Rights Reserved. Copyright © 2021, Yokogawa Electric Corporation

■ ALARM

● Alarming

Alarms which have been generating are listed on a current alarm overview screen that can operation such as alarm confirmation.

History of alarms are listed on a historical alarm overview screen. Alarms can be notified by e-mail and SMS.

CI Server generates and displays alarms on its own. Alarms generated outside the CI Server (e.g. CENTUM system) can be captured and displayed via OPC A&E or OPC UA A&C. V net alarms can be handled as OPC UA alarms also.

Alarms can only be viewed and manipulated by authorized users.

The alarming functionality consists of the following functions.

Category	Function	Description
Alarm detection	Judgment by limit	Judges the presence of an alarm condition based on the high/low limit values of the item value.
	OPC A&E alarm detection	Captures alarm information from an OPC A&E server.
	OPC UA A&C alarm detection	Alarm information is taken from OPC UA A&C server.
	V net alarm detection	Alarm information is directly taken from Vnet/IP and converted to the OPC UA alarm format. V net alarms are handled as OPC UA alarms.
Alarm acknowledgment	Alarm acknowledgment	Operators perform the operation to acknowledge important alarms.
Alarm display/operation	Alarm overview	Lists active alarms or alarms that were active in the past.
	Alarm sound	Plays the alarm sound according to the alarm that has occurred.
	Area of Interest	Filters the alarms by the label attached to the data.
	Alarm selection area	Filters alarms by conditional expression.
	Alarm shelving	Temporarily shelves low-priority alarms to respond to high-priority alarms.
	Alarm link display	From the alarm overview, calls up the window related to the active alarm.
	Export to file	Exports alarms to a file.
	Alarm inhibition	Alarms can be turned off for each data or device.
Alarm group	First-out group	Shows only the first alarm in the group. Multiple groups can be nested.
	Alarm collection group	Manages alarm states collectively for grouped alarm sources.
Alarm notification	Alarm notification	Sends alarm notification by email or SMS.
Report	Report function	Outputs alarms as reports.

The alarming functionality consists of the following functions.

Name	Description
Current alarm overview	Displays active alarms. Alarm acknowledgement operation is performed on this screen.
Historical alarm overview	Displays the records/history of alarms that occurred and returned to normal in the past, and acknowledgement operation and other alarm operations performed.
Shelved alarm overview	Displays alarms that have been shelved and moved from the current alarm overview.

Filters can be used for alarm display/operation and alarm notification. Two types of filters are available:

Type	Description
Filter by date and time	Filters by specifying the date and time or specifying the period.
Filter by conditions	Filters by data name, area of interest, or alarm selection area.

All Rights Reserved. Copyright © 2021, Yokogawa Electric Corporation

The following display behavior can be set for alarms.

Type	Description
Delayed alarm	Displays as an alarm only when the alarm state continues for a certain period of time.
Repeated alarm	Displays as an alarm at specified time intervals if the specified time elapses while the alarm state remains.

With the alarm grouping function, the situation where many individual alarms are raised can be avoided to reduce the load of the operator responding to alarms. There are two types of groups:

Type	Description
First-out group	This is a mechanism to avoid that the alarm overview becomes a flood of alarms by displaying only the first raised alarm in the group, suppressing the alarms in the group that would otherwise be raised after that. Multiple groups can be nested.
Alarm collection group	Active/acknowledged/reset states are managed collectively for grouped alarm sources.

● Alarm System Performance Analysis (ASPA)

ASPA is a function that analyzes alarm data history and creates reports. ASPA provides performance analysis according to EEMUA191 and ISA18.2, which are guidelines for ensuring the quality and effectiveness of alarm systems, and displays the analysis results in graphs and charts. By taking measures according to the analysis results, the load on the operator and the risk of critical alarms being overlooked can be reduced to avoid making mistakes or delays in making decisions to ensure safety.

Main analysis items:

- Operator load KPI (EEMUA191 section 4.1.1)
- Operator load performance (EEMUA191 section 4.1.2)
- Alarm rate and alarm flood (EEMUA191 appendix A12.7)
- Top ten alarm factors (EEMUA191 appendix A12.6)
- Long-standing alarm (EEMUA191 appendix A12.8)
- Correlation of serious alarms (EEMUA191 appendix A12.11)

● V net Alarm Gateway (VAGW)

VAGW is a function that receives alarm events or alarm status information from Vnet/IP, and converts them into an OPC UA A&C format that CI Server can process. FCS/UGS/UGS2 (*1) of CENTUM VP and SCS (*2) of ProSafe-RS alarms are handled as the OPC UA alarms. Moreover, the alarm acknowledgement operation can be synchronized with station from which alarms occur through Vnet/IP.

*1: For FCS, V net stations connected to CI Server via V net router are also subject to obtaining alarms.
*2: SCSs that are integrated with CENTUM VP are subject to obtaining alarms.

VAGW supports CENTUM VP R6.07.10 or later. Regarding CENTUM VP's system alarm messages, process alarm messages, and operation record messages related to the operation and monitoring function (hereafter referred to as messages), the following messages are not eligible for reception by the CI server. The main items not subject to reception are shown below. For details, refer to TI 36K01A15-01EN.

Messages to be checked by the operation and monitoring function of the relevant HIS.

- Messages for the status and operation of HIS
- Messages for HIS settings and engineering

Others

- Messages for UACS
- Messages for CENTUM XL, μXL (HF bus / RL bus)

All Rights Reserved. Copyright © 2021, Yokogawa Electric Corporation

■ APPLICATION

● Linkage with GIS

This function links to a Geographic Information System (GIS) and acquires map images from an external Web mapping server to display various information of CI Server on the map by superimposing the symbol graphics of CI Server.

● DTSX Function

Distributed Temperature Sensor (DTSX) is a sensor that uses a fiber-optic cable to measure temperatures along the length of the cable. CI Server can acquire data from the Yokogawa DTSX module and display it on the trend screen.

● AGA Calculations

The AGA (American Gas Association standards) calculation function consists of a set of functions.

The AGA calculation function covers the following standards:

- AGA3: Orifice metering of natural gas and other related hydrocarbon gases
- AGA7: Measurement of natural gas by turbine meters
- AGA8: Compressibility factors of natural gas and other related hydrocarbon gases
- AGA9: Measurement of gas by multipath ultrasonic meters
- AGA10: Speed of sound in natural gas and other related hydrocarbon gases
- AGA11: Measurement of natural gas by Coriolis meter
- V-Cone: Measurement of natural gas by V-cone
- Water-Cone: Measurement of natural gas by Water-cone

Further, the following additional calculations are supported:

- Gross heating value, relative density and compressibility factor for natural gas mixtures from composition analysis by AGA5 or GPA2172 method
- Atmospheric pressure depending on latitude and altitude

■ ENGINEERING FUNCTION

● Features

CI Server provides engineering environment for re-using engineering data, operation and monitoring windows, and graphic components of operation and monitoring windows. Engineering in a remote environment and engineering using text files are also possible. Engineering can be performed efficiently even for large scale system. All items in the following "● List of Engineering Items" can be defined while the CI Server is running.

● List of Engineering Items

- User definition
  Define the users who perform operation and monitoring and the user and the authority for the one who performs engineering. Define user's authority to an authority group and assign a user to the authority group.
- Controller connection definition
  Set controllers to be connected and communication protocols for the connection.
- External interface definition
  When using external interfaces, define each external interface.
- Operation and monitoring data definition
  Define the hierarchical structures, names, and attributes of the data that CI Server will handle.
  The below is examples of attributes.
  -Data type, engineering unit
  -Mapping with data in the controller
  -Alarm settings for each data (limit value, display color, group, acknowledgement type, etc.)
- Data processing definition
  CI Server can start a program created in advance according to the timing of events (changes in collected data, etc.) or a defined schedule. Two programming languages are available: Java and language specific to CI Server. Various calculations and process control operations that use multiple data can be programmed.
- Alarm definition
  Define the items described in "● Alarming" above.
- Definition for historical data management
  Define the data saved as historical data, and the settings (fixed cycle/event base and saving period). Define the settings to a historical group and assign the saving data to the historical group.
- Audit trail definition
  Define if there are items that need to be saved as an audit trail in addition to the default save items.
- Report definition
  Define the format, output timing, and output destination of reports.
- Operation and monitoring window definition
  Create windows for operation and monitoring.

All Rights Reserved. Copyright © 2021, Yokogawa Electric Corporation

Main definition items:
- Placement of components (graphics, text, data display, bar graphs, etc.)
- Placement of symbols (graphics of equipment such as pumps and tanks, ISA symbols, etc.)
- Placement of HMI components (alarm overview, trends, reports, etc.)
- Attribute settings (display/setting data, window expansion, color change, animation, etc.) of each placed component

The tool for creating windows has various mechanisms for efficient window creation.
In the tool, graphics commonly used for equipment and devices are registered as reusable symbols. Symbols can be created and registered.
- Window parts called components are provided.
- Template windows can be created.
- The windows and parts (symbols, components, etc.) on the window are easily copied.

● List of Engineering Tools

Engineering tool	Define items / Description
Engineering Module	User definition Controller connection Operation and monitoring data definition Data processing definition Alarm settings Definition for historical data management Audit trail definition Report definition
Edit Module	Operation and monitoring window definition
Setup File Editor	Basic configuration of the system
Quick Load Tool	All items (Configuration import/export)
CI Exchange for CENTUM VP	Extract necessary information from the CENTUM VP project database and converts to CI Server database
CI Exchange for Prodigy	Extract necessary information from the CCC Prodigy project database and converts to CI Server database

■ APPLICATION CAPACITY

Item	Specification	Remarks
Maximum number of CI Core (*1)	4095 stations	In the case of HAC, the number of CI Core actually installed is counted. If more than 4095 CI Core are needed, please consult Yokogawa.
Maximum number of controllers that can be connected to one CI Core	10000 stations	
Maximum number of CI Core hierarchy layers	128 levels	
Maximum number of CI Portal that can be connected to one CI Core (*1)	4095 stations	
Maximum number of CI View that can be connected to one CI Portal	500 stations	Includes the CI View that run on the same computer as CI Portal and HTML5 clients.
Maximum number of monitors that can be connected to one CI View	4 stations	
Maximum number of data items that can be defined	16 million data	
Maximum length of data name	256 characters	Includes the dots (.) delimiting the levels in the name.
Maximum number of levels in data hierarchies	128 levels	
Maximum length of a data hierarchy level name	31 characters	
Number of HMI screens	Unlimited	
Update cycle of HMI screen display	100 millisecond (default)	This value can be changed.
Maximum number of users	Unlimited	
Maximum number of user groups	Unlimited	

*1: The total number of nodes (= computer stations) in one domain may not exceed 4095 (computer stations with only a CI View installed are not counted as a Node).

All Rights Reserved. Copyright © 2021, Yokogawa Electric Corporation

■ OPERATING ENVIRONMENT

● Software Operating Environment

OS

Platform	Name
Microsoft Windows	Windows 11 Pro (64-bit) (*1) (*2)
	Windows 11 Enterprise (64-bit) (*6)
	Windows 10 Enterprise LTSC 2019 (64-bit)
	Windows 10 IoT Enterprise LTSC 2019 (64-bit)
	Windows 10 IoT Enterprise LTSC 2021 (64-bit) (*1)
	Windows 11 Enterprise LTSC 2024 (64-bit) (*6)
	Windows 11 IoT Enterprise LTSC 2024 (64-bit) (*6)
	Windows Server 2019 Standard (64-bit)
	Windows Server IoT 2019 Standard (64-bit)
	Windows Server 2022 Standard (64-bit) (*1)
	Windows Server IoT 2022 Standard (64-bit) (*1)
	Windows Server 2025 Standard (64-bit) (*6)
	Windows Server IoT 2025 Standard (64-bit) (*6)
Linux	Red Hat Enterprise Linux 9.6 (64-bit) (*3) (*4)
	Ubuntu 24.04 LTS (64-bit) (*5)

Note: For software of other companies that runs on Windows or Linux, there are limitations on the combination with the CI Server software and usage, so please contact Yokogawa.
Note: Please contact YOKOGAWA for using CI Server with Linux.
Note: CI View, the operator interface, is supported only on Windows OS.
*1: Supported by R1.03 or later
*2: MELSEC (/DME□□) is supported by R1.04 or later.
*3: supported by R1.04 or later.
*4: Red Hat Enterprise Linux 8.1 (64-bit) is supported by R1.01
Red Hat Enterprise Linux 8.4 (64-bit) is supproted by R1.02 and R1.03
*5: supported by R1.04 or later
*6: supported by R1.05 or later

IT Security Tool

IT Security Tool	Supported OS
IT security version 2.0	Windows 10 (IoT) Enterprise LTSC 2019
	Windows 10 (IoT) Enterprise LTSC 2021
	Windows Server (IoT) 2019 Standard (*1)
	Windows Server (IoT) 2022 Standard
	Windows 11 (IoT) Enterprise LTSC 2024 (*2)

Note: For IT security version 3.0, please refer to GS 36K01C30-01EN "CS2CITS IT Security 3 software".
*1: Support by R1.02 or later
*2: Support by R1.05 or later

Vnet/IP

Vnet/IP	Windows 10 (IoT) Enterprise LTSC 2019
	Windows 10 (IoT) Enterprise LTSC 2021
	Windows Server (IoT) 2019 Standard (*1)
	Windows Server (IoT) 2022 Standard
	Windows 11 (IoT) Enterprise LTSC 2024 (*2)

*1: Support by R1.02 or later
*2: Support by R1.05 or later

All Rights Reserved. Copyright © 2021, Yokogawa Electric Corporation

Dual-redundant Platform for Computer

Dual-redundant Platform for Computer	Windows Server (IoT) 2019 Standard (*1)
	Windows Server (IoT) 2022 Standard (*2)

Note: For more details, please refer to the GS 30A05C10-01EN “Dual-redundant Platform for Computer”.
*1: Supported by Dual-redundant Platform for Computer R2.02 and CI Server R1.02 or later.
*2: Supported by Dual-redundant Platform for Computer R2.03 and CI Server R1.03 or later.

Web browser (for CI View Operator Interface)

Web browser (for CI View Operator Interface)	Google Chrome 143.0.7632.45
	Mozilla Firefox 147.0.1
	Microsoft Edge 144.0.3719.115

Web browser (for CI View HTML5)

Web browser (for CI View HTML5)	Google Chrome 143.0.7632.45

Microsoft Excel (for Excel Add-in reports)

Microsoft Excel		Support OS
Version	Edition	
Office2024 (32-bit / 64-bit)	Standard Professional Plus	Windows 10 Pro (64-bit) Windows 10 Enterprise (64-bit) Windows 10 LTSC 2019 (including IoT version for OEM use) Windows Server 2019 Standard (64-bit)
Microsoft 365 (32-bit / 64-bit)	Semi-Annual Enterprise Channel 2022 / 2208	Windows 10 Pro (64-bit) Windows 11 Pro (64-bit) Windows 10 Enterprise (64-bit) Windows 10 LTSC 2019 (including IoT version for OEM use) Windows 10 Enterprise LTSC 2021 (including IoT version for OEM use) Windows Server 2022 Standard (64-bit)

PDF reader (for viewing Instruction Manuals)

PDF reader (for viewing Instruction Manuals)	Adobe Acrobat Reader DC

● Hardware Operating Environment

CI Core/CI Gateway

Hardware requirements for CI Core are shown below.
CI Core/CI Gateway runs on computers with the following specifications.

Table CI Core/CI Gateway hardware operating environment

CPU	Mandatory	Intel Core i7 3.40 GHz or higher
Main memory	Mandatory	8 GB or more (*1) (*2) (*3)
Storage	Mandatory	HDD/SSD with a capacity of 1 TB or more
Communication device	Mandatory (In case Vnet/IP connection)	VI702 (control bus interface card) PCI Express
	Mandatory (In case Ethernet connection)	Ethernet compatible network port (*4)
DVD drive	Mandatory	A drive supported by the OS used. An external DVD-ROM drive can also be used.

Note: If the hardware capacity satisfies the required performance, it is not mandatory to meet the described specification in the above table.
*1: When 30 or more controllers (FCS / UGS / SCS) are connected using VAGW, adding 8 GB of memory is required.
*2: When using OPC UA Server, adding the memory is required according to the following number of Items.
- less than 20,000 Items: no addition
- less than 100,000 Items: adding 8 GB
- less than 200,000 Items: adding 12 GB
- more than 200,000 Items: adding 4GB per 100,000 Items

*3: When using ASPA, adding 8 GB of memory is required.
*4: Please prepare the number of this according to the network configuration. When using HAC, using a dedicated network port for HAC is recommended.

All Rights Reserved. Copyright © 2021, Yokogawa Electric Corporation

CI Portal
Hardware requirements for CI Portal are shown below.
CI Portal runs on computers with the following specifications.

Table CI Portal hardware operating environment)

CPU	Mandatory	Intel Core i7 3.40GHz or higher
Main memory	Mandatory	8 GB or more (*1)
Storage	Mandatory	HDD/SSD with a capacity of 1TB or more
Communication device	Mandatory	Ethernet compatible network port (*2)
DVD drive	Mandatory	A drive supported by the OS used. An external DVD-ROM drive can also be used.
Peripherals	Mandatory	Sound function (*3)

Note: If the hardware capacity satisfies the required performance, it is not mandatory to meet the described specification in the above table.
*1: When using ASPA, adding 8 GB of memory is required.
*2: Please prepare the number of this according to the network configuration.
*3: Required only when using audio output such as alarm sound.

CI View
Hardware requirements for CI View are shown below.
CI View runs on computers with the following specifications (IBM PC/AT compatibles).

Table CI View hardware operating environment (when CI Core and CI Portal run on different computers)

CPU	Mandatory	Intel Core i7 3.40GHz or higher
Main memory	Mandatory	8 GB or more
Storage	Mandatory	HDD/SSD with a capacity of 500 GB or more and free space of 1 GB or more
Communication device	Mandatory	Ethernet compatible network card 1 Gb (*1)
DVD drive	Mandatory	A drive supported by the OS used. An external DVD-ROM drive can also be used.
Peripherals	Mandatory	Sound card (*2)

Note: The hardware also that doesn't meet performance described in the above can be used as CI view if its performance meets a purpose of a project according to the screen contents; in case the CI view is not used as a main component of operation and monitoring or is used with a tablet device.
Note: CI View, the operator interface, is supported only on Windows OS.
*1: The number of ports including onboard Ethernet. Prepare as many as needed according to the network configuration.
*2: Required only when using audio output such as alarm sound.

● Virtualization platform (R1.02 or later)

CI Server runs on Yokogawa IA System Products Virtualization Platform.

For details, refer to the GS "OpreX IA System Virtualization Platform HY-V" (GS 30A05B10-01EN)

● Dual-redundant Platform for Computer (R1.01 or later)

CI Server runs on Dual-redundant Platform for Computer.

For details, refer to the GS "Dual-redundant platform for computer" (GS 30A05C10-01EN)

All Rights Reserved. Copyright © 2021, Yokogawa Electric Corporation

■ MODEL AND SUFFIX CODES

● CI Server Software License

CI Server Software License (provided by downloading)

			Description
Model		CS2CLCD	CI Server Software License provided by downloading
Suffix Codes		-L	Software license
		1	Always 1
		1	Always 1
Option Codes	YOKOGAWA Controller Connection (*1)	/FCS□□	FCS Connection Max Item Numbers: Unlimited
		/UGS□□	UGS/UGS2 Connection Max Item Numbers: Unlimited
		/SCS□□	SCS Connection Max Item Numbers: Unlimited
		/FCA□□	FCS Connection Max Item Numbers: Counted as CI Core Items
		/UGA□□	UGS/UGS2 Connection Max Item Numbers: Counted as CI Core Items
		/SCA□□	SCS Connection Max Item Numbers: Counted as CI Core Items
	CI Core for Windows (*2) (*3)	/CA□□	CI Core Max Item Numbers: 1,000
		/CB□□	CI Core Max Item Numbers: 2,000
		/CC□□	CI Core Max Item Numbers: 4,000
		/CD□□	CI Core Max Item Numbers: 8,000
		/CE□□	CI Core Max Item Numbers: 16,000
		/CF□□	CI Core Max Item Numbers: 32,000
		/CG□□	CI Core Max Item Numbers: 64,000
		/CH□□	CI Core Max Item Numbers: 128,000
		/CJ□□	CI Core Max Item Numbers: 256,000
		/CK□□	CI Core Max Item Numbers: Unlimited
	CI Core for LINUX (*2) (*3)	/LA□□	CICore (LINUX) Max Item Numbers: 1,000
		/LB□□	CICore (LINUX) Max Item Numbers: 2,000
		/LC□□	CICore (LINUX) Max Item Numbers: 4,000
		/LD□□	CICore (LINUX) Max Item Numbers: 8,000
		/LE□□	CICore (LINUX) Max Item Numbers: 16,000
		/LF□□	CICore (LINUX) Max Item Numbers: 32,000
		/LG□□	CICore (LINUX) Max Item Numbers: 64,000
		/LH□□	CICore (LINUX) Max Item Numbers: 128,000
		/LJ□□	CICore (LINUX) Max Item Numbers: 256,000
		/LK□□	CICore (LINUX) Max Item Numbers: Unlimited
	CI Core Extension	/CAB□□	Ex Items Numbers: 1,000 to 2,000
		/CBC□□	Ex Items Numbers: 2,000 to 4,000
		/CCD□□	Ex Items Numbers: 4,000 to 8,000
		/CDE□□	Ex Items Numbers: 8,000 to 16,000
		/CEF□□	Ex Items Numbers: 16,000 to 32,000
		/CFG□□	Ex Items Numbers: 32,000 to 64,000
		/CGH□□	Ex Items Numbers: 64,000 to 128,000
		/CHJ□□	Ex Items Numbers: 128,000 to 256,000
		/CJK□□	Ex Items Numbers: 256,000 to Unlimited
	CI Portal	/PTL□□	Additional CI Portal (*4)

Note: Please refer to the "■ EXTERNAL INTERFACE" described earlier for the limitation of OS each of Option Codes.
Note: Specify the required number of licenses in the last two digits (□□) of each option code.
Note: An item is an area in the CI Server for storing one piece of data. The data from a controller or data created in CI Server by calculation is stored.
Note: The installer and instruction manual are included in the download files.

All Rights Reserved. Copyright © 2021, Yokogawa Electric Corporation

Option Codes	**CI View**	/VER□□	Additional CI View (Operator Interface) including 1 concurrent View
		/VRA□□	Additional CI View (Operator Interface) including 20 concurrent View
		/VRB□□	Additional CI View (Operator Interface) including 30 concurrent View
		/VRC□□	Additional CI View (Operator Interface) including 40 concurrent View
		/VRD□□	Additional CI View (Operator Interface) including 50 concurrent View
		/VRE□□	Additional CI View (Operator Interface) including 60 concurrent View
		/VRX□□	Additional CI View (Operator Interface) including 61 or more concurrent View
		/VEM□□	Additional CI View (HTML5) including 1 concurrent View
		/VMA□□	Additional CI View (HTML5) including 20 concurrent View
		/VMB□□	Additional CI View (HTML5) including 30 concurrent View
		/VMC□□	Additional CI View (HTML5) including 40 concurrent View
		/VMD□□	Additional CI View (HTML5) including 50 concurrent View
		/VME□□	Additional CI View (HTML5) including 60 concurrent View
		/VMX□□	Additional CI View (HTML5) including 61 or more concurrent View
	Equipment Driver	/DEC□□	IEC 60870-5 Protocol
		/DEP□□	IEC 61850 Protocol
		/DDN□□	DNP3 Master Driver
		/DWS□□	WITS Level 0 Slave
		/DWM□□	WITS Level 0 Master
		/DHE□□	HEX Repeater
		/DRC□□	Rockwell Automation Driver
		/DSE□□	Siemens Driver
		/DBB□□	Emerson Bristol Babcock, BSAP Drivers
		/DFR□□	Emerson Fisher ROC
		/DME□□	MELSEC Driver
		/DMR□□	OMRON FINS Driver
		/DTE□□	Telemetry Integration Environment (TIE)
		/DHA□□	HART Router
		/DBK□□	Beckhoff BK8100
		/DBA□□	Beckhoff ADS
		/DBM□□	Bachmann M1COM
		/DVN□□	Vnet/IP Interface Package (for Virtualization platform)
	Interface	/PCU□□	OPC UA Server (DA/A&C/HA)
		/PCD□□	OPC Classic Server (DA/A&E)
		/PCT□□	OPC Tunneller
		/PDB□□	ODBC Server
	Redundant Architecture	/ADH□□	Dual HAC (5)
		/ATH□□	Triple HAC (*5)
		/AQH□□	Quad HAC (*5)
		/ADR□□	Dual Redundant Platform for Computer (*6)
	Architecture	/EES□□	CI Core for Enterprise Engineering Sever
	Application	/ASP□□	ASPA
		/DTS□□	DTSX
		/GYS□□	GIS
		/PTR□□	PI Trend

Note: Please refer to the "■ EXTERNAL INTERFACE" described earlier for the limitation of OS each of Option Codes.
Note: Specify the required number of licenses in the last two digits (□□) of each option code.
Note: An item is an area in the CI Server for storing one piece of data. The data from a controller or data created in CI Server by calculation is stored.
Note: The installer and instruction manual are included in the download files.

All Rights Reserved. Copyright © 2021, Yokogawa Electric Corporation

*1: Please prepare according to the number of Yokogawa controllers which are connected to CI Core via Vnet/IP. Select either Unlimited Numbers for connectible items (A) or Counted as CI Core Items (B). Mixing (A) and (B) is not acceptable for Yokogawa Controllers connected with the same CI Core.
*2: One of each of components CI Core, CI Portal, and CI View included.
*3: Please purchase the same number of options as number of CI Core needed.
*4: One CI Portal and one CI View are included.
*5: Licenses for the number of CI Core that will actually be installed for the redundancy are required. For example, when selecting dual HAC "/ADH01", specify that the number in each option code is doubled. In addition, for CI View, regardless of the number of redundant units, please specify the number of concurrent connections to the CI Portal.
*6: “Dual-redundant Platform for Computer” (PC2CKM) must be ordered separately. No need to order “Dual-redundant Platform Versatile License” (FT2SDR01).

CI Gateway Software License

			Description
Model		CS2CGWD	CI Gateway Software License
Suffix Codes		-L	Software license
		1	Always 1
		1	Always 1
Option Codes	**CI Gateway (*1) (*2)**	/GWB□□	CI Gateway Max Items Numbers: 2,000
		/GWC□□	CI Gateway Max Items Numbers: 4,000
		/GWD□□	CI Gateway Max Items Numbers: 8,000
		/GWE□□	CI Gateway Max Items Numbers: 16,000
		/GWF□□	CI Gateway Max Items Numbers: 32,000
		/GWG□□	CI Gateway Max Items Numbers: 64,000
		/GWH□□	CI Gateway Max Items Numbers: 128,000
		/GWJ□□	CI Gateway Max Items Numbers: 256,000
		/GWK□□	CI Gateway Max Items Numbers: Unlimited
	CI Gateway Extension	/GBC□□	GW Extension Items Numbers: 2,000 to 4,000
		/GCD□□	GW Extension Items Numbers: 4,000 to 8,000
		/GDE□□	GW Extension Items Numbers: 8,000 to 16,000
		/GEF□□	GW Extension Items Numbers: 16,000 to 32,000
		/GFG□□	GW Extension Items Numbers: 32,000 to 64,000
		/GGH□□	GW Extension Items Numbers: 64,000 to 128,000
		/GHJ□□	GW Extension Items Numbers: 128,000 to 256,000
		/GJK□□	GW Extension Items Numbers: 256,000 to Unlimited
	CI Gateway Extention to CI Core	/GBB□□	GW to Core Items Numbers: 2,000
		/GCC□□	GW to Core Items Numbers: 4,000
		/GDD□□	GW to Core Items Numbers: 8,000
		/GEE□□	GW to Core Items Numbers: 16,000
		/GFF□□	GW to Core Items Numbers: 32,000
		/GGG□□	GW to Core Items Numbers: 64,000
		/GHH□□	GW to Core Items Numbers: 128,000
		/GJJ□□	GW to Core Items Numbers: 256,000
		/GKK□□	GW to Core Items Numbers: Unlimited

Note: Specify the required number of licenses in the last two digits (□□) of each option code.
Note: An item is an area in the CI Server for storing one piece of data. The data from a controller or data created in CI Server by calculation is stored.

*1: Includes all Equipment Drivers and Interfaces.
*2: When HAC configuration, please place an order for CS2CLC with Redundant Architecture option.

All Rights Reserved. Copyright © 2021, Yokogawa Electric Corporation

● CI Server Subscription License

Subscription licenses can be utilized with Yokogawa Cloud, on-premise, and third party cloud environments. CI Server remains operational with a valid license, scheduled annual renewal is required to ensure subscription licenses are valid.

CI Server Software PaaS License for Yokogawa Cloud

			Description
Model		CL2CLC	CI Server Software PaaS License for Yokogawa Cloud (*1)
Suffix Codes		-L	Software License
		1	Always 1
		1	Always 1
Option Codes	**CI Core (*2) (*3)**	/S1	CI Core Small Max Item Numbers: 8,000
		/M1	CI Core Medium Max Item Numbers: 64,000
		/L1	CI Core Large Max Item Numbers:Unlimited
	CI Portal	/P1	Additional CI Portal (*4)
	CI View	/VER□□	Additional CI View (Operator Interface) including 1 concurrent View1
		/VRA□□	Additional CI View (Operator Interface) including 20 concurrent Views
		/VRB□□	Additional CI View (Operator Interface) including 30 concurrent Views
		/VRC□□	Additional CI View (Operator Interface) including 40 concurrent Views
		/VRD□□	Additional CI View (Operator Interface) including 50 concurrent Views
		/VRE□□	Additional CI View (Operator Interface) including 60 concurrent Views
		/VRX□□	Additional CI View (Operator Interface) including 61 or more concurrent Views
		/VEM□□	Additional CI View (HTML5) including 1 concurrent View
		/VMA□□	Additional CI View (HTML5) including 20 concurrent View
		/VMB□□	Additional CI View (HTML5) including 30 concurrent View
		/VMC□□	Additional CI View (HTML5) including 40 concurrent View
		/VMD□□	Additional CI View (HTML5) including 50 concurrent View
		/VME□□	Additional CI View (HTML5) including 60 concurrent View
		/VMX□□	Additional CI View (HTML5) including 61 or more concurrent View
	Redundant Architecture	/ADH□□	Dual HAC
		/ATH□□	Triple HAC
		/AQH□□	Quad HAC

Note: Both CL2CLC and CL2CARVM must be placed orders at the same time.
Note: It is annual license based on Yokogawa Cloud.

*1: This MS Code includes CI Server Product Maintenance License (PML).
*2: One of each of components CI Core, CI Portal, and CI View included.
*3: Include all Equipment Driver and Interface.
*4: One CI Portal and one CI View are included.

All Rights Reserved. Copyright © 2021, Yokogawa Electric Corporation

VM for Yokogawa Cloud License

		Description
Model	CL2CARVM	VM for Yokogawa Cloud License
Suffix Codes	-N	New
	-R	Renew
	1	Always 1
	1	Always 1
Instance	-N02	Standard Server 2 Core, Main memory 8 GB
	-N04	Standard Server 4 Core, Main memory 16 GB
	-N08	Standard Server 8 Core, Main memory 32 GB
	-N16	Standard Server 16 Core, Main memory 64 GB
OS	-W19E	Windows Server 2019 English
Storage	-D1T	DISK 1024 GB
	-D2T	DISK 2048 GB
Option Codes	/P	Monitoring (PING)

Note: Both CL2CLC and CL2CARVM must be placed orders at the same time.
Note: As a general rule, the contract is annual.

All Rights Reserved. Copyright © 2021, Yokogawa Electric Corporation

CI Server Software Annual License for 3rd Party Cloud / On-premise

			Description
Model		SB2CLC	CI Server Software Annual License for 3rd Party Cloud / On-premise (*1)
Suffix Codes		-L	Software License
		1	Always 1
		1	Always 1
Option Codes	**CI Core (*2) (*3)**	/S1	CI Core Small Max Item Numbers: 8,000
		/M1	CI Core Medium Max Item Numbers: 64,000
		/L1	CI Core Large Max Item Numbers: Unlimited
	CI Portal	/P1	Additional CI Portal (*4)
	Yokogawa Controller Connection (*5)	/FCS□□	FCS Connection Max Item Numbers: Unlimited
		/UGS□□	UGS/UGS2 Connection Max Item Numbers: Unlimited
		/SCS□□	SCS Connection Max Item Numbers: Unlimited
		/FCA□□	FCS Connection Max Item Numbers: Counted as CI Core Items
		/UGA□□	UGS/UGS2 Connection Max Item Numbers: Counted as CI Core Items
		/SCA□□	SCS Connection Max Item Numbers: Counted as CI Core Items
	CI View	/VER□□	Additional CI View (Operator Interface) including 1 concurrent View
		/VRA□□	Additional CI View (Operator Interface) including 20 concurrent Views
		/VRB□□	Additional CI View (Operator Interface) including 30 concurrent Views
		/VRC□□	Additional CI View (Operator Interface) including 40 concurrent Views
		/VRD□□	Additional CI View (Operator Interface) including 50 concurrent Views
		/VRE□□	Additional CI View (Operator Interface) including 60 concurrent Views
		/VRX□□	Additional CI View (Operator Interface) including 61 or more concurrent Views
		/VEM□□	Additional CI View (HTML5) including 1 concurrent View
		/VMA□□	Additional CI View (HTML5) including 20 concurrent View
		/VMB□□	Additional CI View (HTML5) including 30 concurrent View
		/VMC□□	Additional CI View (HTML5) including 40 concurrent View
		/VMD□□	Additional CI View (HTML5) including 50 concurrent View
		/VME□□	Additional CI View (HTML5) including 60 concurrent View
		/VMX□□	Additional CI View (HTML5) including 61 or more concurrent View
	Redundant Architecture	/ADH□□	Dual HAC
		/ATH□□	Triple HAC
		/AQH□□	Quad HAC

Note: As a general rule, the contract is annual.

*1: This MS Code includes CI Server Product maintenance License (PML).
*2: One of each of components CI Core, CI Portal, and CI View included.
*3: Include all Equipment Driver and Interface.
*4: One CI Portal and one CI View are included.
*5: This is for on-premise option. Place orders for numbers of Yokogawa Controllers connected with CI Core via Vnet/IP. Select either Unlimited Numbers for connectible items (A) or Counted as CI Core Items (B). Mixing (A) and (B) is not acceptable for Yokogawa Controllers connected with the same CI Core.

All Rights Reserved. Copyright © 2021, Yokogawa Electric Corporation

CI Gateway Software License (subscription)

			Description
Model		SB2CGWD	CI Gateway Software License (Subscription) (*1)
Suffix Codes		-L	Software license
		1	Always 1
		1	Always 1
Option Codes	**CI Gateway (*2) (*3)**	/GWB□□	CI Gateway Max Items Numbers: 2,000
		/GWC□□	CI Gateway Max Items Numbers: 4,000
		/GWD□□	CI Gateway Max Items Numbers: 8,000
		/GWE□□	CI Gateway Max Items Numbers: 16,000
		/GWF□□	CI Gateway Max Items Numbers: 32,000
		/GWG□□	CI Gateway Max Items Numbers: 64,000
		/GWH□□	CI Gateway Max Items Numbers: 128,000
		/GWJ□□	CI Gateway Max Items Numbers: 256,000
		/GWK□□	CI Gateway Max Items Numbers: Unlimited
	CI Gateway Extension	/GBC□□	GW Extension Items Numbers: 2,000 to 4,000
		/GCD□□	GW Extension Items Numbers: 4,000 to 8,000
		/GDE□□	GW Extension Items Numbers: 8,000 to 16,000
		/GEF□□	GW Extension Items Numbers: 16,000 to 32,000
		/GFG□□	GW Extension Items Numbers: 32,000 to 64,000
		/GGH□□	GW Extension Items Numbers: 64,000 to 128,000
		/GHJ□□	GW Extension Items Numbers: 128,000 to 256,000
		/GJK□□	GW Extension Items Numbers: 256,000 to Unlimited
	CI Gateway Extention to CI Core	/GBB□□	GW to Core Items Numbers: 2,000
		/GCC□□	GW to Core Items Numbers: 4,000
		/GDD□□	GW to Core Items Numbers: 8,000
		/GEE□□	GW to Core Items Numbers: 16,000
		/GFF□□	GW to Core Items Numbers: 32,000
		/GGG□□	GW to Core Items Numbers: 64,000
		/GHH□□	GW to Core Items Numbers: 128,000
		/GJJ□□	GW to Core Items Numbers: 256,000
		/GKK□□	GW to Core Items Numbers: Unlimited

Note: Specify the required number of licenses in the last two digits (□□) of each option code.
Note: An item is an area in the CI Server for storing one piece of data. The data from a controller or data created in CI Server by calculation is stored.

*1: This MS Code includes CI Server Product maintenance License (PML).
*2: Includes all Equipment Drivers and Interfaces.
*3: When HAC configuration, please place an order for CS2CLCD with Redundant Architecture option.

All Rights Reserved. Copyright © 2021, Yokogawa Electric Corporation

● Examples of License Selection

The MS code of CI Server license is consisted as combination the part of CI Core function and the part of the other necessary optional function.
An example of MS code used for the system consisted with CI Core, CI Portal, and CI View is in below.
Please make sure to place an order for a product maintenance license “CI Server Software Maintenance” after CI Server software license purchased.

In case of Standalone Configuration

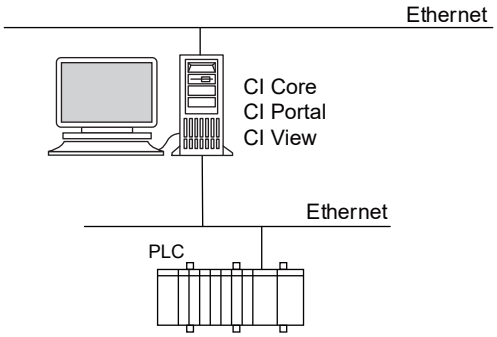

Node		Option Codes	Item	Description
CI Core	CI Core for Windows	/CE□□	1	CI Core Max Item Numbers: 16,000

Note: Modbus communication interface is included as standard in case CI server communicates with PLC via Modbus.

Please specify the following MS Code;
CS2CLCD-L11/CE01

In case of Remote CI Portal/Remote CI View Configuration

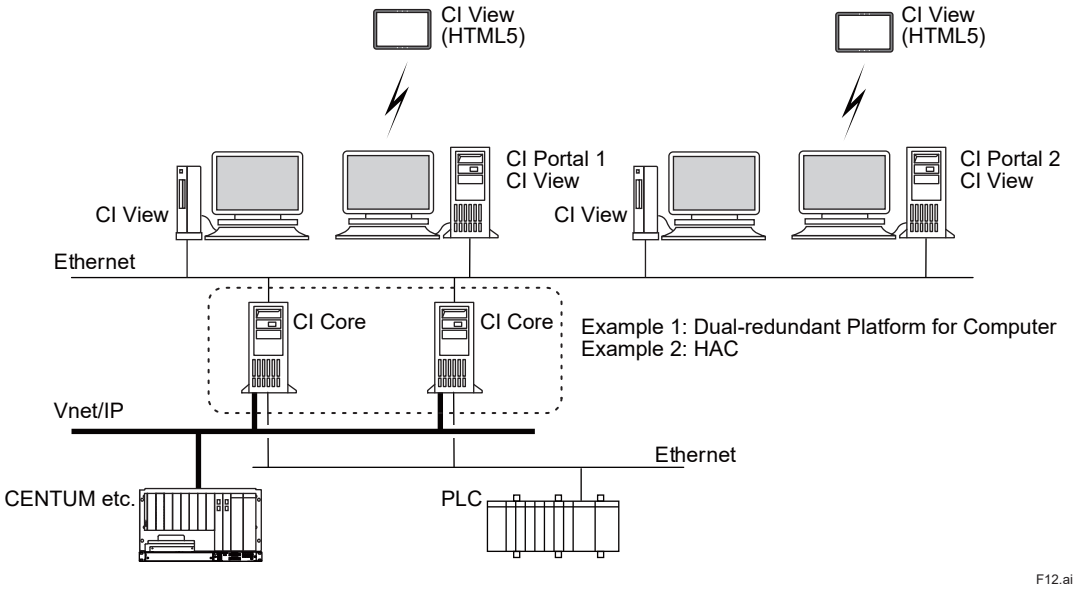

All Rights Reserved. Copyright © 2021, Yokogawa Electric Corporation

Example 1: Dual-redundant Platform for Computer

Please specify /ADR and also place an order for a “Dual-redundant Platform for Computer” (PC2CKM) to use Dual-redundant Platform for Computer.

Node		Option Codes	Item	Description
CI Core	YOKOGAWA Controller Connection	/FCS□□ (*1)	5	FCS Connection
	CI Core for Windows	/CG□□	1	CI Core Max Item Numbers: 64,000
	Equipment Driver	/DDN□□	1	DNP3 Master Driver
	Redundant Architecture	/ADR□□	1	Dual Redundant Platform for Computer
CI Portal 1	CI Portal	/PTL□□	1	Additional CI Portal
	CI View	/VER□□	1	Additional CI View (Operator Interface)
	CI View	/VEM□□	1	Additional CI View (HTML5)
CI Portal 2	CI Portal	/PTL□□	1	Additional CI Portal
	CI View	/VER□□	1	Additional CI View (Operator Interface)
	CI View	/VEM□□	1	Additional CI View (HTML5)

*1: /FCA□□ is also selectable. In this case, please place orders for CI Core including item numbers of Yokogawa controllers because CI Core items for Windows are consumed.

Please specify the following MS Code;

CS2CLCD-L11/FCS05/CG01/DDN01/ADR01/PTL02/VER02/VEM02

Example 2: HAC

the same number of the licenses with the number of computers used as dual-redundant are needed for HAC configuration. In case HAC configuration with dual-redundant, please specify each of Option codes according to the Two of computers.

Node		Option Codes	Item	Description
CI Core	YOKOGAWA Controller Connection	/FCS□□ (*1)	10	FCS Connection
	CI Core for Windows	/CG□□	2	CI Core Max Item Numbers: 64,000
	Equipment Driver	/DDN□□	2	DNP3 Master Driver
	Redundant Architecture	/ADH□□	1	Dual HAC
CI Portal 1	CI Portal	/PTL□□	1	Additional CI Portal
	CI View	/VER□□	1	Additional CI View (Operator Interface)
	CI View	/VEM□□	1	Additional CI View (HTML5)
CI Portal 2	CI Portal	/PTL□□	1	Additional CI Portal
	CI View	/VER□□	1	Additional CI View (Operator Interface)
	CI View	/VEM□□	1	Additional CI View (HTML5)

*1: /FCA□□ is also selectable. In this case, please place orders for CI Core including item numbers of Yokogawa controllers because CI Core items for Windows are consumed.

Please specify the following MS Code;

CS2CLCD-L11/FCS10/CG02/DDN02/ADH01/PTL02/VER02/VEM02

All Rights Reserved. Copyright © 2021, Yokogawa Electric Corporation

In case of Gateway Configuration (in-house/third party system)

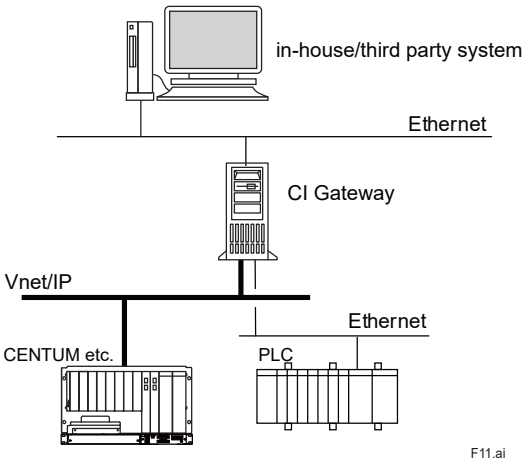

Node	Model	Option Codes	Item	Description
CI Gateway	CS2CGWD	/GWB□□	1	CI Gateway Max Item Numbers: 2,000

Please specify the following MS Code;
CS2CGWD-L11/GWB01

In case of Gateway Configuration (CI Core)

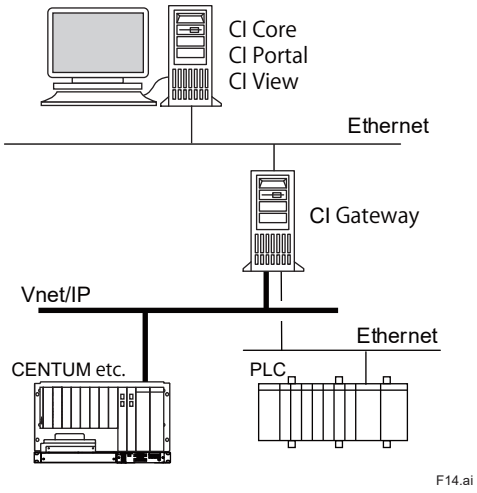

Node	Model	Option Codes	Item	Description
CI Core	CS2CLCD	/CB□□	1	CI Core Max Item Numbers: 2,000
CI Gateway	CS2CGWD	/GWB□□	1	CI Gateway Max Item Numbers: 2,000

Please specify the following MS Code;
CS2CLCD-L11/CB01
CS2CGWD-L11/GWB01

All Rights Reserved. Copyright © 2021, Yokogawa Electric Corporation

■ ORDERING INFORMATION

Specify the model and suffix code(s).

■ SOFTWARE LICENSE AGREEMENT AND LIMITED WARRANTY

● Software License Agreement

Before using the CI Server release 1 software products, refer to the website below and agree on all the terms and conditions of “CI Server Release 1 Software License Agreement.”

CI Server Release 1 Software License Agreement:
http://www.yokogawa.com/EndUserLicenseAgreement/

● Limited Warranty

CI Server is provided with the limited warranty which covers its software media only. Support services over vulnerability and non-conformance shall be provided by Product Maintenance License (PML) and Lifecycle Agreement. For more details of PML for CI Server, please refer to the GS 30A01F30-01EN "Product Maintenance License".

■ TRADEMARK ACKNOWLEDGMENT

The names of corporations, organizations, products and logos herein are either registered trademarks or trademarks of Yokogawa Electric Corporation and their respective holders.

All Rights Reserved. Copyright © 2021, Yokogawa Electric Corporation
Subject to change without notice.